SERVICE MANUAL

POCKET WELTING MACHINE

series 32

REECE®

COPYRIGHT

No safeguard, safety applicance, or device attached to or forming an integral part of this machine shall be removed or made ineffective except for the purpose of making immediate repairs or adjustments.

Any such safeguard, safety appliance, or device removed or made ineffective during the repair or adjustment of such machine shall be replaced immediately upon completion of such repair or adjustment.

No machine shall be operated until such repairs or adjustments have been made and the machine is in good working condition.

Safety glasses should be worn when operating the machine.

DECEMBER 1989

This illustrated parts list is published by

THE REECE CORPORATION

Gorham Industrial Park
Gorham, Maine 04038

"Precision and Quality Since 1881"

CONTENTS

PREOPERATING SECTION

Setting Line Voltage ____ A 1

Welting Material ____ A 2 - A 3

Work Locating & Drill Hole Lanterns ____ A 4

Threading ____ A 5

Lubrication ____ A 6 - A 7

Control Panel ____ A 8 - A 9

Positions of Control Panel Switches for Various Operating Procedures ____ A10

OPERATING INSTRUCTIONS

Machine Warm-up ____ A11

Operating Procedures ____ A11 - A12

Procedure for Resewing a Welt ____ A13

ELECTRICAL TROUBLESHOOTING & REPAIR

Introduction ____ A15 - A17

General Troubleshooting ____ A19 - A20

1. Clamping Circuit ____ A21 - A24
2. Clamp Table Control Circuit ____ A25 - A28
3. Patch Folding Circuit ____ A29 - A32
4. Automatic Patch Folding Circuit ____ A33 - A36

4a. Clamp Fingers ____ A37

5. Sew/Center Dense Circuit ____ A39 - A42
6. End Dense Circuit ____ A43 - A44
7. Stop Sewing Circuit ____ A45 - A46
8. Thread Pickup Circuit ____ A47 - A48
9. Tab Knife Fingers Circuit ____ A49 - A52
10. Unloader Circuit ____ A53 - A54
11. Center Knife Up/Down ____ A55

ELECTRICAL COMPONENTS

Electrical Components Setting and Adjustments ____ A57 - A64

Barrier Terminal Blocks ____ A65

Control Circuit Board ____ A66

Unloader Circuit Boards ____ A67

Single Phase Power Supply Wiring Diagram ____ A68

Multiple Phase Power Supply Wiring Diagram ____ A69

MECHANICAL & HYDRAULIC SECTION

Clamping ____ A71 - A72

Clamp Table Travel ____ A73 - A77

Patch Folding ____ A79 - A82

Automatic Patch Folding ____ A83 - A85

Sewing ____ A86 - A97

Center Cutting ____ A98 - A100

Tab Cutting ____ A101 - A105

Unloading ____ A107 - A108

Form No. 97-0032-0-000
12/89
Printed in U.S.A.

REECE WELTING MACHINE — series 32

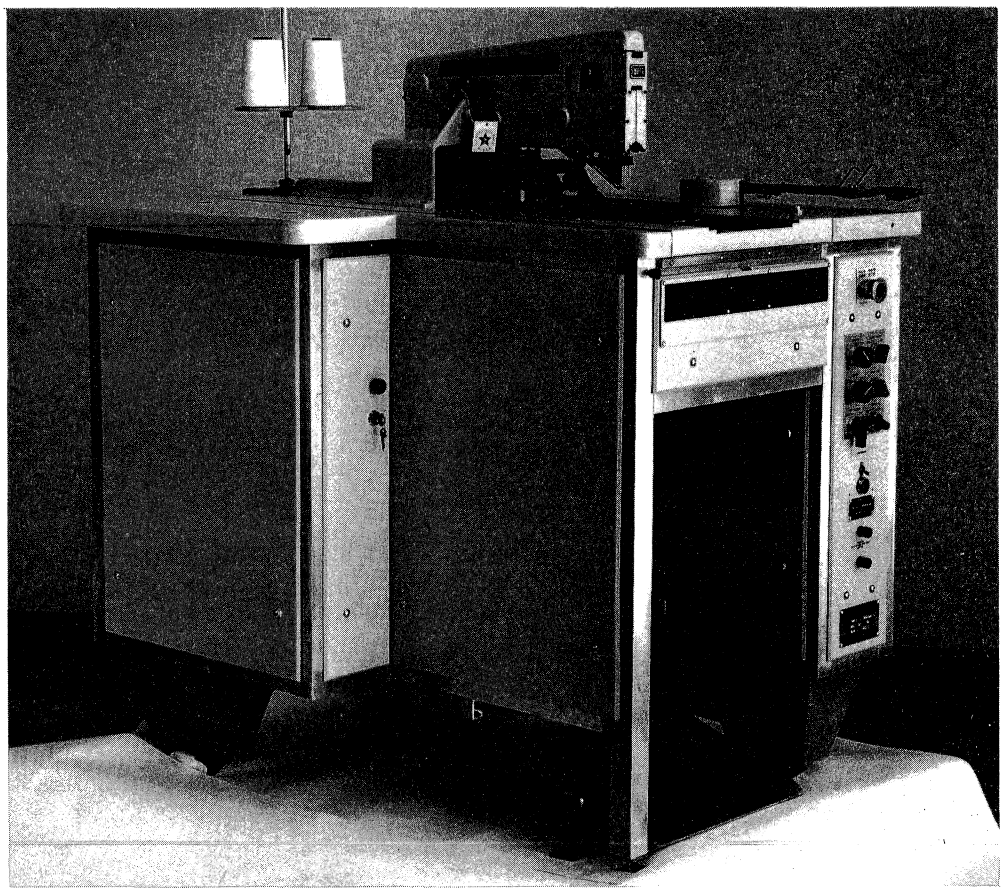

TROUSER MODEL

COAT MODEL ALSO AVAILABLE

SETTING LINE VOLTAGE

Before connecting the machine to an available outlet, accurately check incoming line voltage with a voltmeter and set dial of Adjustable Transformer to the closest setting corresponding to the incoming line voltage.

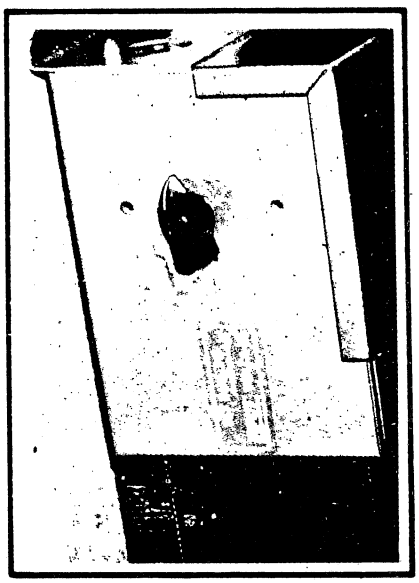

WELTING MATERIAL

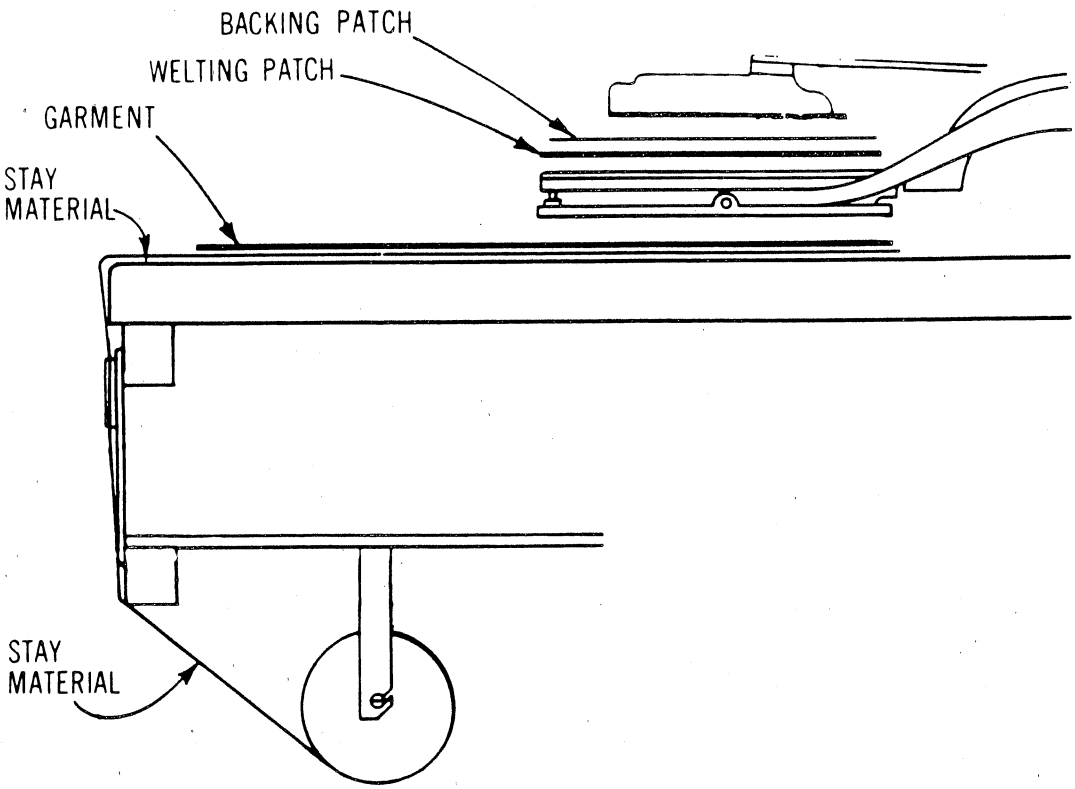

Welting material consists of Welting Patch (garment material), Backing Patch (Pellon L-35) and Stay Material (cotton Silesia). For widths of welting material, refer to chart on Page A3.

WELTING PATCH-(Garment Material)

Welting patch length is one inch longer than actual welt. To produce the best effect, patches for horizontal welts should be cut crosswise to selvage except where stripes in the material are over 1/4 of an inch in width. For vertical or diagonal welts, patches should be cut parallel to the selvage.

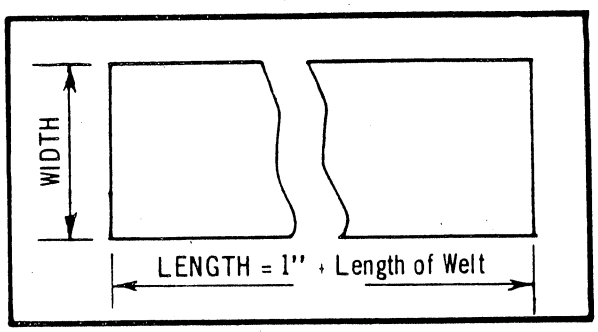

BACKING PATCH(Pellon)*

Backing Patch length is the same as Welting Patch, one inch longer than the welt. For double welting use patches with 1/4 of an inch end slits. For single welting and knits, use patches without end slits.

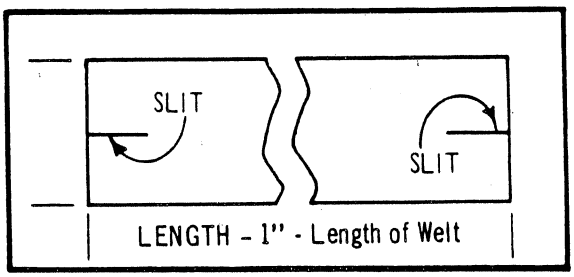

* Pellon L-35 backing material is recommended. This material may be cut in your own plant or may be obtained precut from the Pellon Corp., N.Y., N.Y. Specify Reece Welting black or white, length, width and with or without end slits.

STAY MATERIAL

Stay Material is used for pockets on coats and coat linings. The pocket bag is used in place of the stay material in making trouser pockets. Stay material should be (cotton Silesia) with sizing. This material is available in rolls of various widths (refer to chart) with perforations every eight inches. The perforations aid in allowing the operator to separate the stay material while the machine is sewing. Ask your Reece Representative for name and address of suppliers.

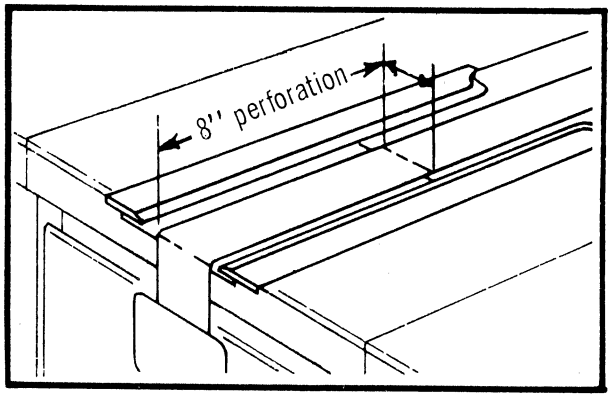

WELTING MATERIAL WIDTHS

SIZE	WELTING PATCH	BACKING PATCH	STAY MATERIAL
3/8"	2-1/2" to 2-3/4"	2-1/2" 2" for Trouser Application	2"
7/16"	2-1/2" to 2-3/4"	2-1/2" 2" for Trouser Application	2"
1/2"	2-3/4" to 3"	2-1/2" 2" for Trouser Application	2"
5/8"	3-1/4" to 3-1/2"	3-1/4"	3"
3/4" Overlapping Welt	4" to 4-1/4" 5-1/4" to 5-1/2"	3-1/2" 5"	2" - 3" 2" - 3-1/2"
7/8" Single Welt	4-1/4" to 4-1/2"	3-3/4" 4"	3" 3-1/2"

WORK LOCATING & DRILL HOLE LANTERNS

APPLICATIONS

These lanterns were specifically designed to facilitate work location and increase positioning accuracy. They project light slots on the garment which accurately fix the location for positioning work-locating marks, such as drilled holes, which can be applied to garment on the cutting table.

Other types of work-locating marks can, of course, also be utilized; such as darts, seams, slits, chalk marks, etc.

In the production of double-welt sack coat pockets, for example, utilizing drilled holes for locating marks, the forward lantern should be positioned so that when the forward hole is located in the hairline cross-point, it will accurately establish the starting point on every garment. The rear hole will provide accurate pocket alignment as long as it falls anywhere along the vertical light slots of the rear lantern. Thus, the same hole-drilling pattern may be used on double-welt work for all sizes since pocket length is controlled by the Series 32 machine.

Caution should be exercised to avoid drilling holes in the tab areas of the welt as drilling may shred or so reduce a tab area that no effective tab can be formed.

In single-welt work, the rear hole should be accurately located also since it becomes the starting point on alternate pocket operations.

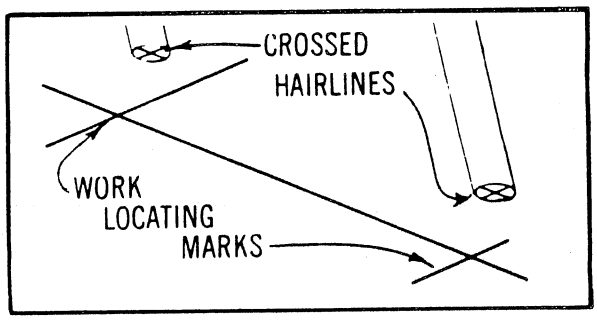

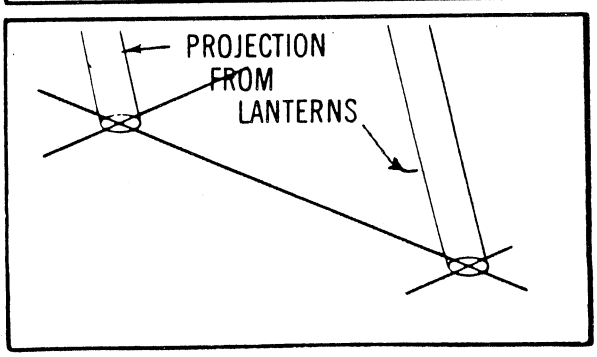

MAINTENANCE & ADJUSTMENTS

1. To focus light slots, move lens carriers secured by screws (A).

2. Vary lantern bracket angle and bend if necessary so that folding brushes do not obstruct lantern projection when clamp foot is raised.

3. To square light slots with the work, loosen brace and rotate light as necessary.

4. Lamp should be centered over the reticle to centralize reticle in projection, and to obtain maximum intensity.

NOTE: Observe that on some materials the light slots are clearer as the garment is being moved into position, than when the garment rests in position. Therefore, while setting lanterns, use a material on which the light slots are clearly visible in rest position. The materials used in production need not be used when setting lanterns.

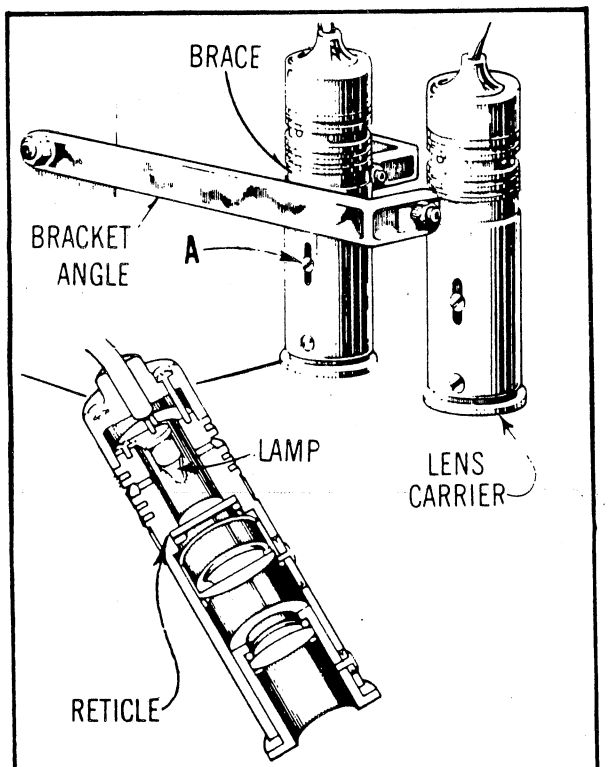

Drill hole lanterns placed under Bedplate cast a fluorescent glow through the garment to illuminate the drill hole as the garment passes over the bedplate opening.

THREADING

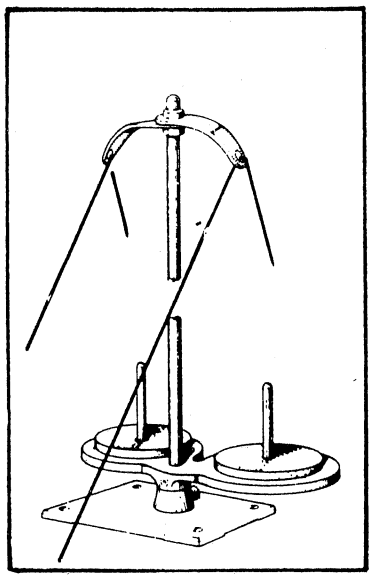

Thread color should be a basic shade to match the garment material, but it need not be an exact match.

Thread both needles from left to right.

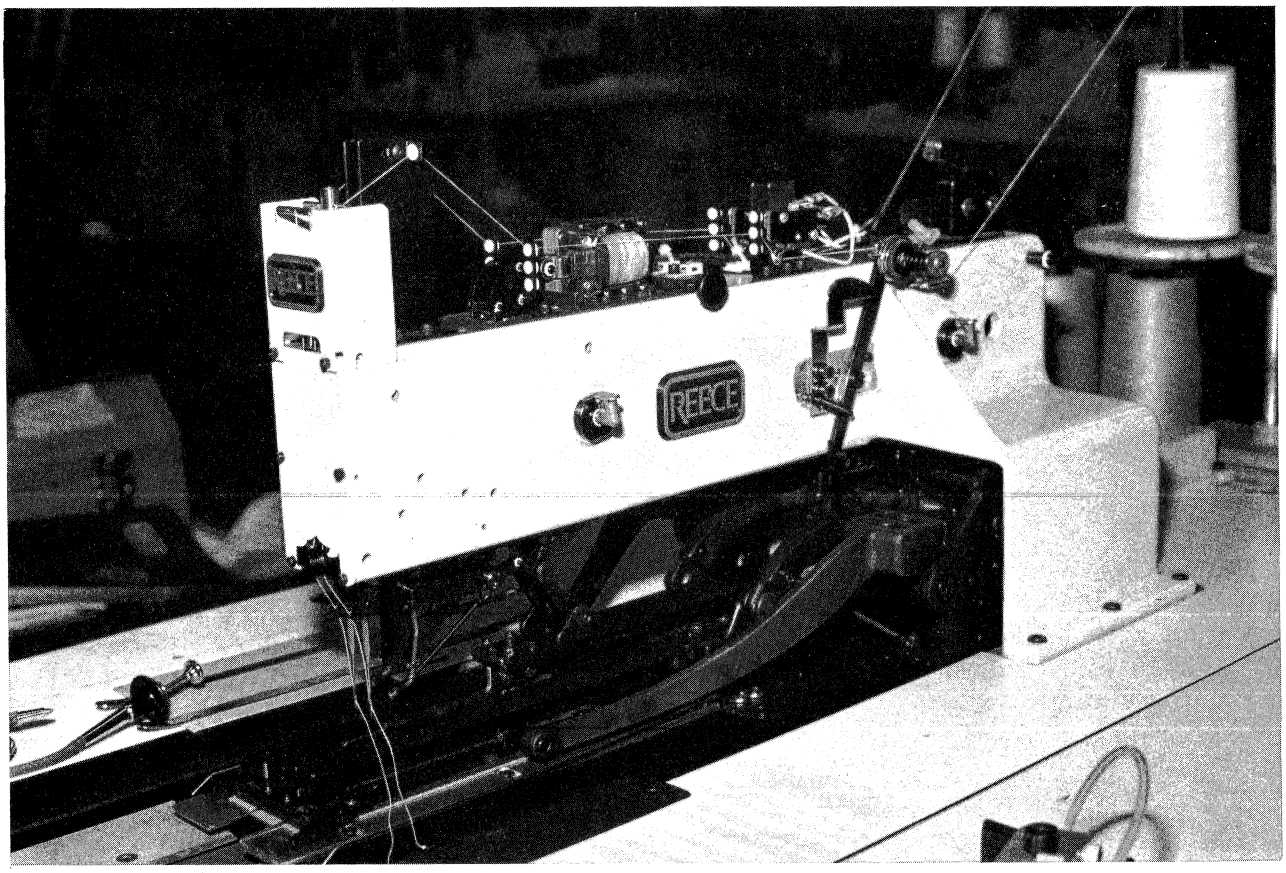

LUBRICATION

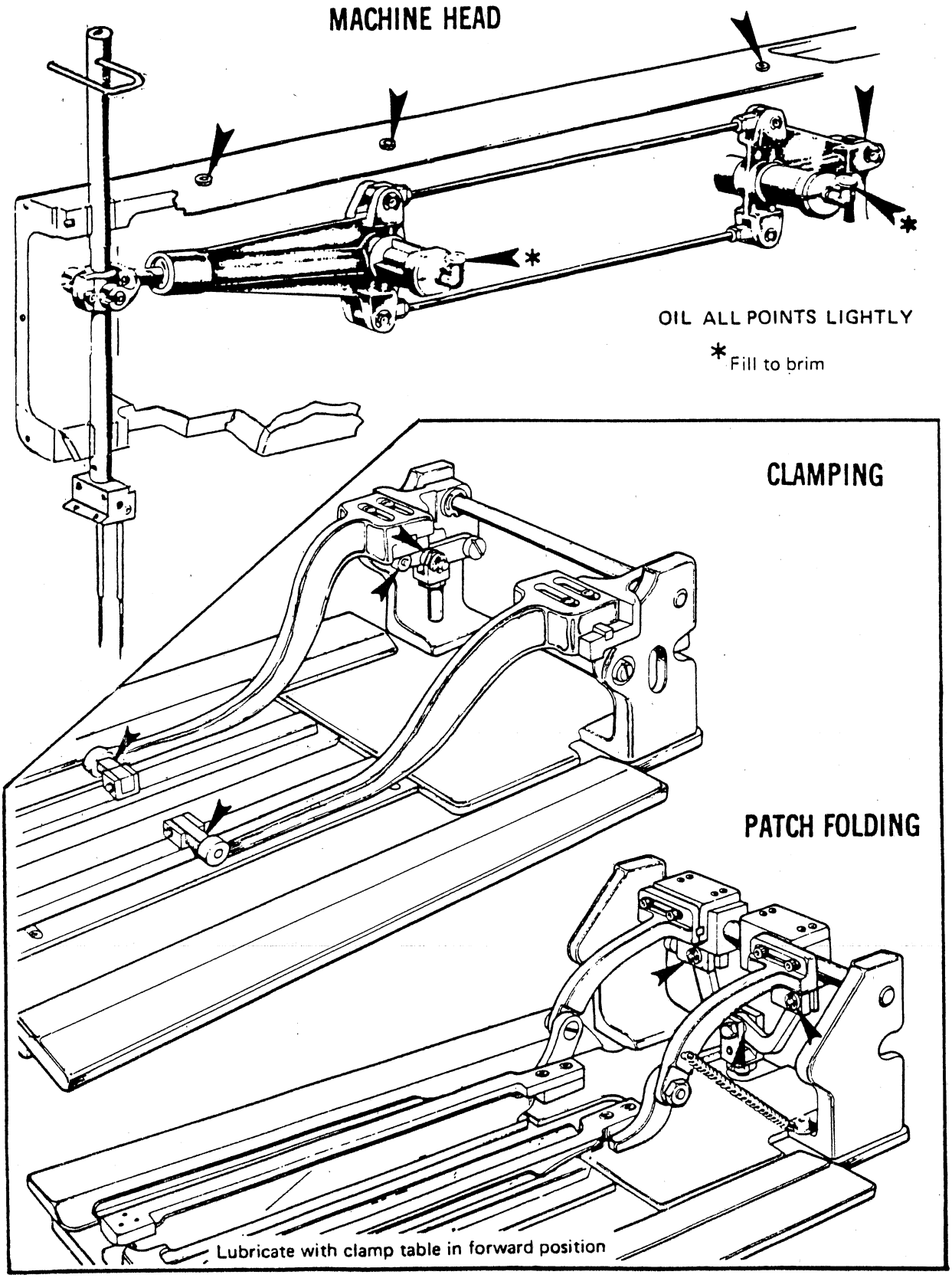

LOOPERS

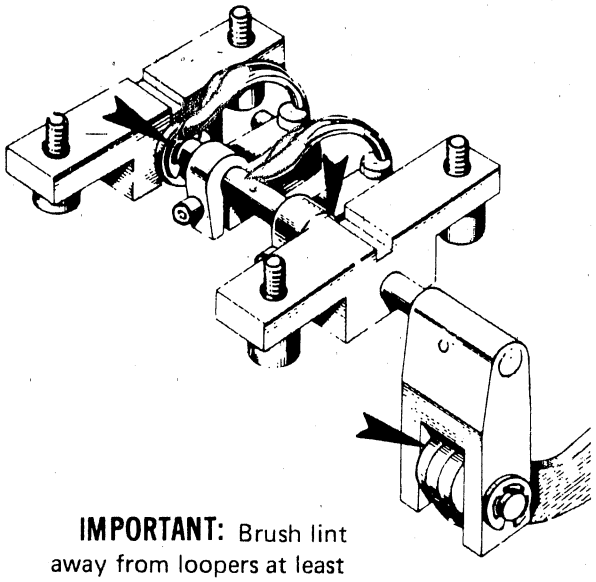

IMPORTANT: Brush lint away from loopers at least twice daily

CLUTCH

Lubricate weekly or when squeal develops in the Clutch

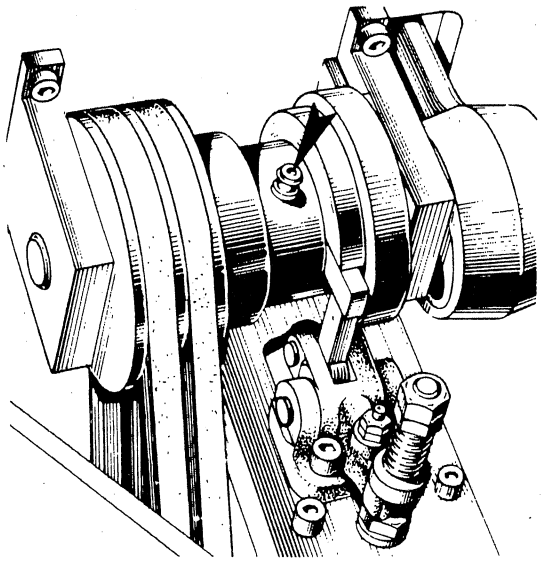

Apply grease to fitting until it begins to come out from sides of Clutch Bearing.

NOTE: To easily reach grease fitting, turn Clamp Clearing Switch to "Forwd" (forward) position causing Clamp table to move to its forward position.

TURNING FINGERS MECHANISM

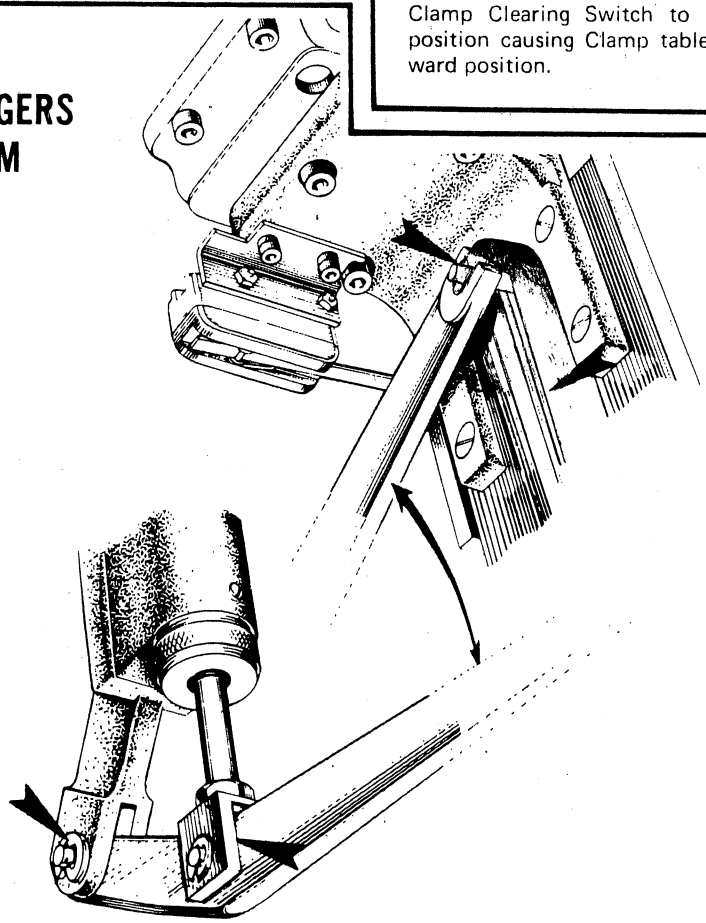

CONTROL PANEL

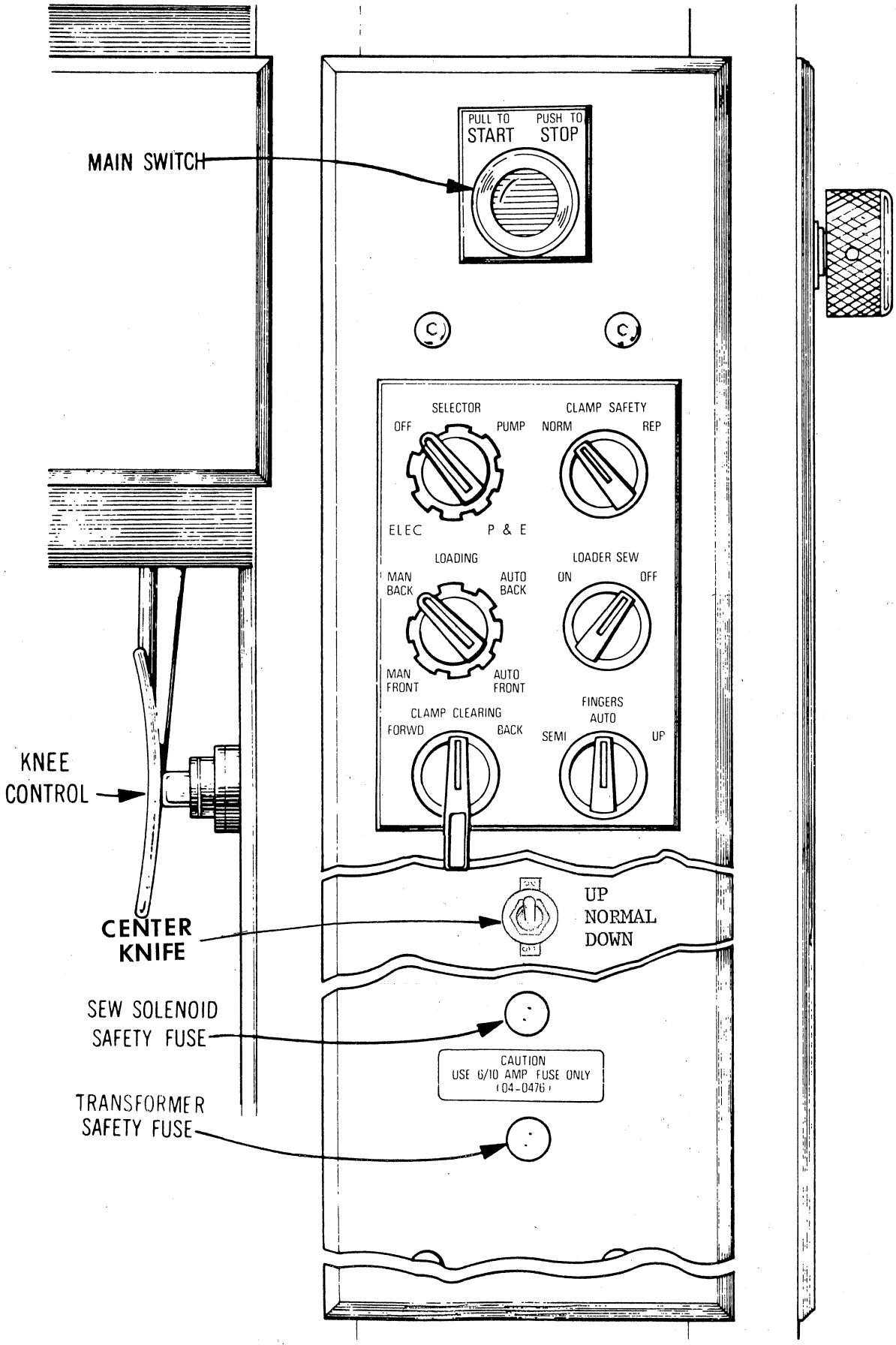

MAIN SWITCH (Start/Stop)

To start machine -- pull out.

To stop machine -- push in.

KNEE CONTROL

To manually activate Sewing Cycle with Loading Switch in "Man Front" or "Man Back" position

To manually activate Tab Knives with the Fingers Switch in "Semi" position

To manually activate Loader Motor for repair purposes.

SELECTOR SWITCH

OFF POSITION ___ With Main Switch pulled out, the pump, motor and electricity are turned off, but the table light remains on.

PUMP POSITION ___ Electricity is off while pump and motor remain on. This position is used for repairing machine and to turn off Sewing Cycle in event of thread breakage.

P & E POSITION ___ Pump is operating and all electrical components are set to operation. This is the position for regular machine operation.

ELEC POSITION ___ Electricity is on. Pump and Motor are off. Used for unlocking drive shaft. This is also used by servicemen for repairing and checking switches.

CLAMP SAFETY SWITCH

NORM POSITION _____ Clamp arms function normally.

REP POSITION _____ Used when repairing welts. Prevents clamp foot from raising and prevents machine from sewing.

LOADING SWITCH

MAN BACK POSITION _____ Used when loading material in the Back position. Also for manual operation of clamping, patch folding and sewing.

MAN FRONT POSITION _____ Used when loading material in the Front position. Also for manual operation of clamping, patch folding and sewing.

AUTO FRONT POSITION ___ Used in this position for Automatic Front Loading.

NOTE: Clamp Clearing switch will not operate when switch in in this position. To use Clamp Clearing switch for clearing trapped air from hydraulic lines, first set this switch to "MAN FRONT" or "MAN BACK". Also set Fingers switch to "SEMI". With switches set as indicated, air is cleared from lines by alternately turning Clamp Clearing switch between its "FORWARD" and "BACK" positions.

AUTO BACK POSITION ___ Not recommended.

LOADER SEW SWITCH

ON POSITION _____ Functions only when machine is in automatic position. Machine will sew automatically when activated.

OFF POSITION _____ Machine will not sew automatically.

CLAMP CLEARING SWITCH

FORW POSITION _____ Clamp table moves to the forward position.

BACK POSITION _____ Clamp table moves to the back position.

FINGERS SWITCH

SEMI POSITION ___ Tab Knives will not rise until Knee Switch is activated. This position should be used until the operator becomes proficient in operating the machine.

AUTO POSITION ___ Tab Knives will rise and retract automatically following the sewing cycle.

UP POSITION _____ Tab Knives stay in the "UP" position at the end of the sewing cycle. Used when replacing Tab Knives.

CAUTION: Never turn machine off when Tab Knives are being held in the UP position. Damage to the Brush Blades and/or the Tab Knives may result.

CENTER KNIFE SWITCH

NORMAL___Center Knife will fire upward to cut material (comes on only during sew cycle). This is the position for regular machine operation.

UP_____Center Knife will immediately fire upward and remain activated. This position is useful for servicing the Center Knife.

DOWN_____Center Knife will immediately fire downward and remain deactivated.

A10 POSITIONS OF CONTROL PANEL SWITCHES FOR VARIOUS OPERATING PROCEDURES

OPERATING PROCEDURES	CONTROL PANEL SWITCHES							REMARKS
	Start Stop	Selector	Clamp Safety	Loading	Loader Sew	Clamp Clearing	Fingers	
Manual Front Loading	Start	P & E	Normal	Manual Front	On or Off	Center	Auto. or Semi.	Clamp Arms will raise auto. at end of cycle if Fingers Sw. is on "Auto or Semi."
Manual Back Loading	Start	P & E	Normal	Manual Back	On or Off	Center	Auto. or Semi.	Clamp Arms will not raise auto. at cycle end if Fingers switch is on Auto or Semi.
Automatic Front Loading	Start	P & E	Normal	Auto. Front	On	Center	Auto.	Operate the clamp to back position by pedal. Auto. cycle starts when pedal is released.
Auto. Back Loading	NOT RECOMMENDED							
To clear machine of air in hydraulic system	Start	P & E	Normal or Repair	Manual Front or Back	On or Off	Forward and Back	Semi.	Operate clamp clearing switch forward and back. Machine cannot be cleared in auto. position.
To operate patch loader arm manually for aligning, etc.	Start	P & E	Repair	Manual Front or Back	On or Off	Center	Any Position	Clamp all the way back. Depress knee switch to start. Release knee switch to stop.
To release drive shaft to operate manually	Start	E	Normal	Manual Front or Back	On or Off	Center	Any Position	Clamp all the way back. Depress knee switch.
To lock shaft	Start	E	Repair	Manual Front or Back	On or Off	Center	Any Position	Turn handwheel to lock.
To make repairs due to thread breaking, etc.	Start	P & E	Repair	Any Position	On or Off	Center	Any Position	Remove patch when clamp is forward. Operate clamp to back position and insert new patch. Return clamp safety switch to normal.
To raise fingers for changing tab knives	Start	P & E	Normal or Repair	Any Position	On or Off	Center	Up	Clamp all the way forward.
To return fingers to down position.	Start	P & E	Normal or Repair	Any Position	On or Off	Center	Auto. or Semi.	

OPERATING INSTRUCTIONS

MACHINE WARM-UP

1. Pull out Main Switch and turn Selector switch to "P & E", ten minutes before starting regular operation.
2. Set Fingers Switch to "Semi" position.
3. Turn Clamp Clearing Switch alternately from "Forward" to "Back" position, several times to clear air from hydraulic lines.
4. Sew and examine a welt on scrap material before starting regular work.

OPERATING PROCEDURES

MANUAL-BACK LOADING

1. Fully depress pedal and hold. This will raise the clamp foot and send the clamp table to its back (sewing) position.
2. Position stay or pocketing material.
3. Position garment over stay material.
4. Raise pedal slightly until clamp drops but folding brushes remain open and patch guide is in up position.
5. Place welt and welt backing material on brush folders and under patch guide.
6. Raise pedal all the way to fold welting material.
7. If threads are not retrieved by thread pick-up fingers, draw the thread forward with tweezers hold with light tension – release as machine starts to sew.
8. Press Knee Switch to start sewing.
9. Set Fingers Switch to Semi position and press Knee Switch again for cutting tabs.

   Note: To set machine for Automatic tab cutting, refer to Control Panel page. Finger Switch, Automatic position.
10. To extract material, depress pedal until clamp foot rises.

MANUAL-FRONT LOADING

1. Clamp foot is automatically held in raised position and Clamp table will remain in its forward position.
2. Position stay or pocketing material.
3. Position garment over stay material.
4. Depressing and holding pedal all the way down, will cause clamp foot to drop and Clamp table to travel to its back (sewing) position.
5. With pedal depressed, folding brushes remaining opened and patch guide remaining in its up position, place welt and welt backing material on brush folders and under patch guide.
6. Raise pedal all the way to fold welting material.
7. If threads are not retrieved by thread pick-up fingers, with tweezers or similar device, draw them forward and hold with light tension -- release as machine starts to sew.
8. Press Knee Switch to sew.
9. Set Fingers Switch to Semi position and press Knee Switch again for cutting tabs.

   Note: To set machine for Automatic tab cutting, refer to Control Panel page, Fingers Switch, Automatic position.
10. Upon descent of turning fingers, clampfoot will automatically rise, allowing material to be removed.

AUTOMATIC FRONT LOADING POSITION

With the machine in the normal stop position (clamp table forward, clamp foot raised, the welt and welt backing material placed in the patch tray.)

1. Trouser pocketing is placed under clamp foot.

2. Trouser leg is placed under clamp foot.

3. Pedal is momentarily depressed, lowering the clamp foot, sending the clamp table to its back position, and activating the automatic cycle.

   Upon actuation of the Automatic circuit, the operator should pick up the welt patch and patch backing to insert in patch tray for the next sewing cycle. The operator should also have sufficient time to pick up the trouser pocket for the next sewing cycle and as soon as the trouser is ejected, be ready to position the pocketing.

4. When the clamp table reaches its back position, the patch loader will load the welt and welt backing onto the folding brushes.

5. As the automatic patch loader is returning to its rest position, the machine will automatically start sewing.

   If the welt patch is not properly loaded into the folding brushes, pressing the pedal will prevent the machine from starting to sew.

   If the machine does not start sewing, the patch loader arm will continue to oscillate. CAUTION – Do not shut machine power off by pushing in Main Switch. Doing so will cause clamp table to move to its forward position and may cause damage to the patch loader.

   If machine does not start sewing, depressing pedal will stop the patch loader arm from oscillating. Then turn loading switch to its Manual-Front position. Turn machine off.

6. The automatic patch loader will stop when the patch loading arm reaches its rest position.

7. Upon the automatic completion of the sewing and turning fingers cycles, the clamp foot will rise and the actuation of the air ejectors will remove the trousers from the machine.

8. The trouser pocket for the next cycle should be held and readied for positioning as soon as the work is ejected.

After Step #3, the machine functions are completely automatic providing for increased production by allowing the operator to prepare for the next cycle while the machine is producing the welt.

PROCEDURE FOR RESEWING A WELT

MANUAL FRONT- MANUAL BACK

1. Prevent Turning Fingers from rising:

   If the Fingers Switch is set on "Auto", quickly pressing the Knee Switch before sewing cycle is completed, will prevent Turning Fingers from rising. Turning Selector Switch to "Pump" will stop the sewing cycle and will also prevent the Turning Fingers from rising.

2. Prevent Clamps from rising:

   When Clamp Table reaches the forward position, set Clamp Safety to "Rep" (repair) position. This will prevent Clamp Foot from rising and losing position of garment, and will also open sewing circuit as a safety feature when rethreading the machine.

3. Remove incompleted Patch and Patch Backing . . . If Selector Switch was used to prevent the Turning Fingers from rising it should now be turned back to the "P & E" position.

4. Depress pedal to return clamp table to its back (Start Sewing) position.

5. Rethread Machine.

6. Insert new Patch and Patch Backing material.

7. Set Clamp Safety Switch to "Norm" and resume production of welt.

AUTOMATIC PATCH LOADING

1. Prevent Turning Fingers from rising . . .same as No. 1 above.

2. Set Loading Switch to "Man Front".

3. Prevent Clamps from rising . . . same as No. 2 above.

4. Remove incompleted Patch and Patch backing . . . same as No. 3 above.

5. Insert new Patch and Patch Backing material in Patch Tray.

6. Depress pedal to return clamp table to its back "Start Sewing" position.

7. Rethread Needle.

8. Depress and hold pedal to open patch folders.

9. Set Clamp Safety Switch to "Norm" position.

10. Set Loading Switch to "Auto Front" position.

11. Release pedal and resume production of welt.

NOTES

ELECTRICAL TROUBLESHOOTING & REPAIR

BASIC TROUBLESHOOTING PROCEDURES

Check that Control Panel Switches are set for the desired Operation Procedure. See Page A10. Determine which function is not operating.

Determining whether Electrical, Hydraulic or Mechanical System or a combination of these systems are at fault.

If involved solenoid is not operating when trying to activate function, the cause of malfunction may be electrical. Refer to Electrical Troubleshooting Section and check the involved circuit.

If involved Solenoid is operating, the cause may be hydraulic. If determined that pump pressure exists, the trouble is then mechanical. Refer to the Mechanical & Hydraulic Section.

IMPORTANT: If solenoids do not operate, attempt to actuate them manually. If plunger snaps into place and it is determined that the solenoid is energized, the trouble is then mechanical. Refer to the Hydraulic & Mechanical Section.

INTRODUCTION TO ELECTRICAL TROUBLESHOOTING & REPAIR

GENERAL APPROACH

The general approach to isolation of faults in the Reece Series 32 Welting Machine is to identify the circuit in which a malfunction occurs, and to identify the faulty component which is causing the malfunction.

The electrical circuits are grouped functionally, but not physically, according to the function they perform. Each major function is performed by a hydraulic or electrical circuit which is actuated by an electrical solenoid. Movement and timing of the functional parts are initiated by switches placed to be actuated in the desired operational sequence.

The ten major functions that are performed in the Reece series 32 Welting machine are illustrated by wiring diagrams. The actual circuits are shown in the wiring schematic on fold out III

The circuits are isolated by the functions they perform as follows:

1. Clamp Circuit
2. Clamp Table Circuit
3. Patch Folding Circuit
4. Patch Loader Motor Circuit
5. Sew/Center Dense Circuit
6. End Dense Circuit
7. Stop Circuit
8. Thread Pickup Circuit
9. Tab Fingers Circuit
10. Unloader Circuit
11. Center Knife Circuit

Examination of the ten wiring diagrams can provide a basic understanding of their electrical functions. The electrical functions are presented in the normal operational sequence of the machine. When a function cannot be produced in normal operation, one of the components (or more) in that particular wiring diagram can be faulty.

For example, if the clamp will not raise when it should, look in the Clamp Circuit. If the turning fingers will not raise (or lower) look in the Turning Fingers diagram. The same approach should be taken for each apparent failure to function.

A procedure for testing the circuits to locate a faulty component is presented in the troubleshooting charts. This procedure is keyed to the diagrams and sequential steps by the following code:

For testing malfunctions that are general to the whole machine, the letter G followed by a sequential number identifies the procedural step, (G1), (G2), (G3), etc.

For tests applicable to a particular circuit, the procedural step is identified by a number, from 1 to 10, indicating the circuit being tested in accordance with the list of diagrams above, followed by a sequential letter for each step. The test procedure steps in the Clamp Circuit are (1A), (1B), (1C), etc., and in the Turning Fingers Circuit they are (9A), (9B), (9C), etc. In the End Dense Circuit, the steps are numbered (6A), (6B), (6C), etc.

If a voltage check is specified, the step number is enclosed in a circle (3D), to indicate that power is on; if a resistance or continuity check is specified, the step number will be enclosed in a square [4G] indicating that power is off. Procedures for making voltage and resistance checks are given in paragraphs following.

Wherever these step numbers are noted, they refer to the same step and the same procedure. Those appearing on the wiring diagrams correspond to the same numbers on the pictorial diagrams. On the barrier terminal blocks, the left side is Y, numbered 1Y through 20Y, and the right side is Z, numbered 1Z through 20Z. The circuit board plug terminals are the test points and are numbered from TP1 through TP35 (The letters following these numbers are color codes.)

WIRE COLOR CODE

W	=	White
Y	=	Yellow
O	=	Orange
R	=	Red
P	=	Pink
V	=	Violet
BL	=	Blue
G	=	Green
GY	=	Gray
BR	=	Brown
BK	=	Black

VOLTAGE CHECKS

All dc voltage checks in the Reece Series 32 Welting Machine are made with respect to ground. Any standard multimeter or vacuum tube voltmeter can be used, having scales that cover the 24 volt dc and 115 volt ac ranges. It is suggested that a meter with a 50 or 60 volt dc scale and a 150 volt ac scale be used. This brings normal readings to midscale where they are most accurate and easy to read.

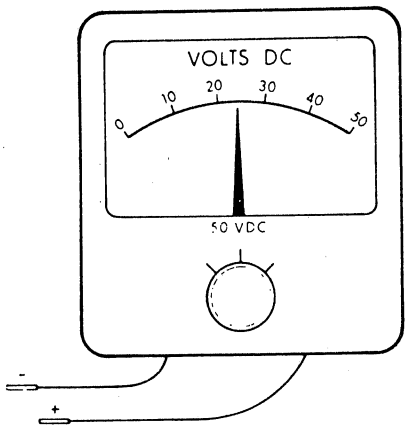

The safest practice in making voltage checks is to make the ground connection, either with an alligator clip lead or the white test jack from 14Z, with the power turned off. Then turn on the power and set up the condition specified in the troubleshooting chart. When the condition has been set up, touch the positive (red) probe to the specified test point or the specified terminal of the barrier terminal block.

When measuring 24 volts dc, all voltages are positive with respect to ground, so the meter should be set to a dc scale, with the negative probe connected to ground; otherwise the pointer will deflect in the wrong direction and rest hard against the stop.

When checking the 115 volt ac circuits, use extreme caution as the line voltage can be dangerous. Polarity does not have to be observed when measuring ac; the black and red probes are interchangeable. Normal operating voltage can vary from 115 to 125 volts ac.

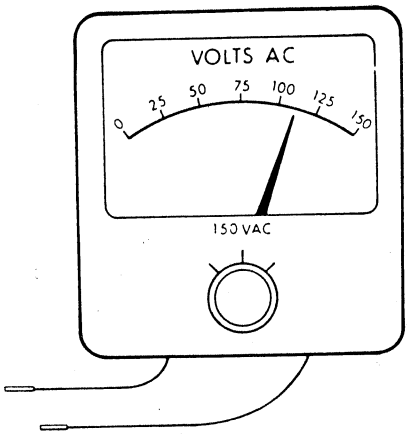

CONTINUITY CHECKS

Continuity checks are made with power off and the meter on the ohms scale. The x10 scale is recommended for all resistance and continuity checks in the Reece Series 32 Welting Machine. Much of the cir-

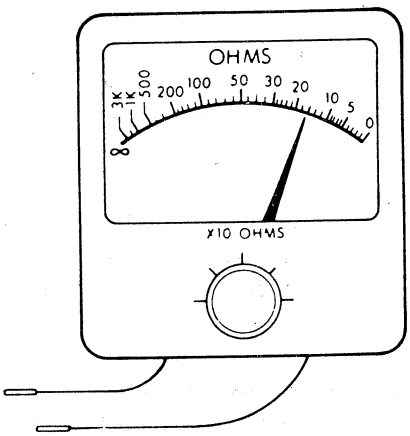

cuitry consists of switches and the path of electrical continuity can be traced through closed contacts which cannot be seen in the switch. When a switch, or series of switches is closed, an electrical path is present in the circuit. Continuity is indicated by a reading (with the power off) of zero ohms, since there is no resistance in the path. (One or two ohms would be considered negligible.) If a switch is not closed when it should be, a reading of infinite resistance is obtained (infinity ∞ on the meter) which is in fact the resistance of the air gap presented by the open switch. When a switch is known to be in the closed position and electrical continuity is not present, the switch is not closing properly and should be replaced. When a switch is known to be in the open position and continuity is present, then the contacts are sticking together creating an undesired closed (or short) circuit. In this case also, the switch should be replaced.

The resistance of most of the solenoids used in the Reece Series 32 Welting Machine is approximately 80 ohms. Any other reading indicates a faulty coil (except for a ±5 ohm deviation). When making resistance readings, however, be sure that other elements are not included in the circuit. In the SEW/CENTER DENSE circuit for instance, there are two solenoids in parallel (one an 80 ohm coil and the other a 30 ohm coil), and when both are included in the measurement, the measurement reads approximately 25 ohms.

In the STOP circuit if the reading includes the safety lamp, the lamp filament will add resistance to the reading. Follow the troubleshooting charts carefully when checking the circuit. If a reading is in doubt, disconnect one side of the element to avoid a parallel circuit measurement.

ALTERNATE TEST POINTS

The test points that are indicated in the troubleshooting chart procedural steps are shown on the wiring diagrams to give a clear understanding of what is being measured in a circuit. In some cases, there are additional test points where the same measurement can be made. In these cases the alternate test points in the circuits are at the same electrical point but a different physical point due to the wire routing and connections. Making the same tests at the alternate points can be useful to reveal breaks in the wires, short circuits, or loose connections.

For this reason, with each wiring diagram there is also a table of main and alternate test points. The alternate test points can be used whenever it is necessary or desirable to isolate troubles in the wiring circuits. When the alternate test point specified is a wire nut, be especially careful to trace the wire correctly from the main test point specified. Do not make checks at the alternate test points unless they are necessary. The location of the wire nuts can be determined by the abbreviations used as follows:

WNC	-	Wire nut in cabinet
WNH	-	Wire nut in head
WNJB	-	Wire nut in junction box

NOTES

G. GENERAL TROUBLESHOOTING CHART

SYMPTOM	MACHINE CONDITIONS	TEST-REMEDY
Electrical circuit and motor dead	MAIN SWITCH — Pull to Start SELECTOR — P & E	(G1) Circuit breakers open. Close or replace.
Same as above	MAIN SWITCH — Push to Stop SELECTOR — P & E	[G2] Set meter to the X10 ohms scale and check for continuity between 14Y/16Y and 17Y/19Y. If a reading is obtained (one or two ohms) the 8 amp fuse is good. If meter reads to infinity (00), replace fuse.
115 volt ac circuit dead (probable short circuit)	MAIN SWITCH — Pull to Start SELECTOR — P & E	(G3) Set voltmeter to the 150 volt ac scale. Check between 16Y and 19Y. If 115 volts is present, the transformer is good. Perform step (G4) NOTE: If a short circuit is present, isolate by removing fuse, Part No. 05-0058 from large transformer. If the short circuit is still present, it is in the motor, high voltage side of the adjustable transformer, main switch, selector switch or circuit board. If short circuit is not discovered there, it can be either in the machine wiring to solenoids or in the front panel components.
24 volt dc circuit dead	Same as above	(G4) Check 24 volts Circuit fuse before making this test. Set voltmeter to the 50 volt dc scale. Connect the negative probe to ground or 14Z. Connect the positive probe to 2Z. Voltage should read 24 volts dc. If no voltage is present, replace transformer Part No. 04-0271.
24 volts dc not available. (possible short circuit)	MAIN SWITCH — Pull to Start SELECTOR — P & E	(G5) Check lower fuse on front panel. If blown, replace and test for short circuit as in [G6]

G. GENERAL TROUBLESHOOTING CHART

SYMPTOM	MACHINE CONDITIONS	TEST-REMEDY
24 volts dc not available – possible short circuit. (continued)	MAIN SWITCH Push to Stop Check to make certain that the fuse is a 6/10 ampere fuse, Part No. 04-0476.	G6 Check for short circuit in 24 volt system by the following procedure: (1) Insert new Transformer Safety 6/10 amp. fuse (04-0476) (2) Remove Control Circuit Board (3) Disconnect red wire from large capacitor (22,000 uf) (4) Disconnect one red wire coming from the 24 volt Transformer at the Diode Bride Rectifier. (5) Connect a 24 volt test lamp in series between the red wire, just disconnected and the rectifier terminal from which it has just been removed. (Use Lamp, 04-0253-0-380 mounted in Lamp Holder, 04-0252-0-008 for 24 Volt test lamp) (6) Pull Main Switch to On, and Selector Switch to "E" or "P & E". If 24 volt test lamp lights, there is a short circuit in the 24 volt system. Make a continuity check through all switches and wiring until the short is located. Make a visual check in the area of the Clamp Table Forward switch and also where the machine harness goes through the table frame. Move the harness to help locate possible chafed-wire shorts.

1. CLAMPING CIRCUIT

GENERAL DESCRIPTION

The clamp circuit raises the clamp or lowers it during the operating cycle (1) while the clamp table is in the front or back position, (2) at the beginning of the cycle for loading and (3) at the end of the cycle for ejection. In the MAN BACK and AUTO BACK loading modes of operation, depressing Clamp Switch (pedal) will raise the clamp for loading.

In the MAN FRONT, AUTO FRONT, and AUTO BACK loading modes of operation, the clamp can be raised and held in the raised position in three different ways:

(1) Set control panel FINGERS switch to SEMI and press knee actuator. The fingers will raise, closing the Fingers Down switch and will then come down closing the Auto Clamp Up switch and raising the clamp.

(2) Set control panel FINGERS switch to UP and then to AUTO or SEMI. The same will happen as in (1).

(3) With the LOADING switch set on MAN FRONT, set the control panel FINGERS switch to AUTO and set the control panel CLAMP CLEARING switch to BACK, then FORWD. Clamp will move back and then forward; the fingers will raise and then go down; the clamp will raise automatically as the Clamp table reaches the forward position.

The clamp can be lowered to its normal, clamp down position by depressing Clamp Switch (pedal) (on MAN FRONT and AUTO FRONT).

The CLAMPING CIRCUIT wiring diagram shows the circuit elements that are involved in operation of the clamp to move it up or down at various points in the operating sequence. A malfunction is indicated by failure of the clamp to respond properly to the switch controls. This diagram will serve as an aid in isolating the cause of a malfunction to one of the elements represented in the wiring diagram. Procedure for correction of any malfunction is given following the circuit description.

CIRCUIT DESCRIPTION

The clamping solenoid is energized when the 115 volt ac circuit is completed through triac Q9. The triac conducts the 115 volts ac when 24 volts dc is applied to its gate terminal.

LOADING switch in MAN BACK or AUTO BACK: The 24 volts dc that triggers triac Q9 into conduction is available through the CLAMP SAFETY switch (NORM position), Clamp Switch (pedal) (depressed), LOADING switch, Clutch Dog switch, and Fingers Down Safety switch.

LOADING switch MAN FRONT, AUTO FRONT or BACK: In these positions, the clamp will raise automatically as the turning fingers return to the down position. The 24 volts dc is available through Auto Clamp Up relay CR7. As the turning fingers rise and actuate the Fingers Down switch, relay CR7 is closed. Voltage is then available through Clamp Table Forward switch, LOADING switch, and the contacts of relay CR7. As the turning fingers return to the down position, the Auto Clamp Up switch is actuated making voltage available through the Auto Clamp Up switch, the Clamp Switch (pedal) (in the normal, not actuated position), the Clamp Safety switch to triac Q9.

The 24 volts dc on the CR7 contacts is also returned to the CR7 coil through blocking diode D18 which acts as a holding circuit to keep the coil energized and the contacts closed. This will hold the clamp in the up position until the circuit is broken by actuation of Clamp Switch (pedal). Releasing this Clamp switch will allow clamp to raise again. The holding circuit will break when the table forward switch is deactuated.

1. CLAMP CIRCUIT WIRING DIAGRAM

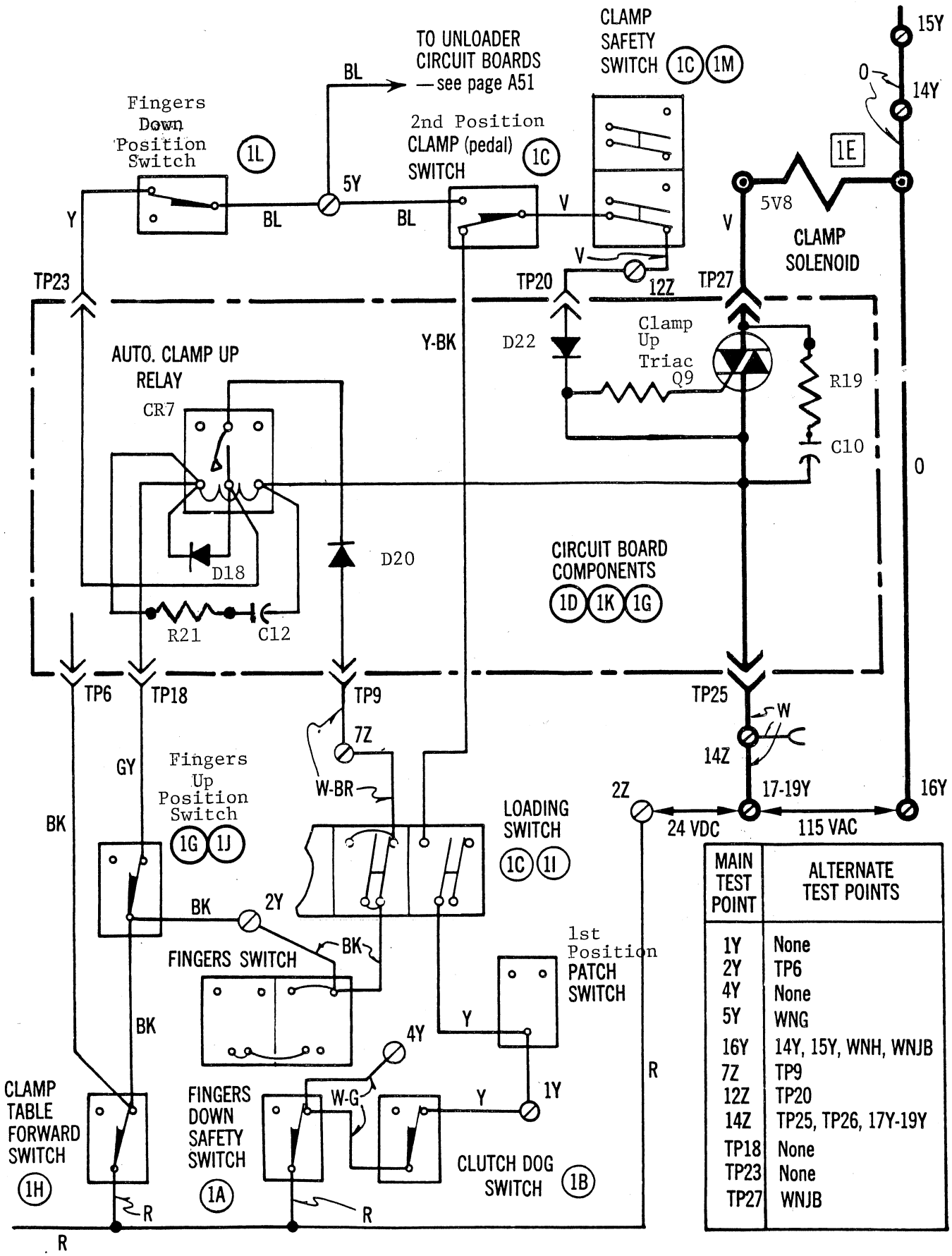

MAIN TEST POINT	ALTERNATE TEST POINTS
1Y	None
2Y	TP6
4Y	None
5Y	WNG
16Y	14Y, 15Y, WNH, WNJB
7Z	TP9
12Z	TP20
14Z	TP25, TP26, 17Y-19Y
TP18	None
TP23	None
TP27	WNJB

1. CLAMP CIRCUIT TROUBLESHOOTING CHART

SYMPTOM	MACHINE CONDITIONS	TEST-REMEDY
Clamp will not raise.	MAIN SWITCH __ Pull to Start SELECTOR _____ P & E LOADING _____ MAN BACK	(1A) Check with voltmeter on the 50 volt dc scale. Connect negative probe to ground or 14Z and the positive probe to 4Y. If a 24 volt dc reading is obtained, the Fingers Down Safety switch is good. If not, replace switch.
Same as above	Same as above	(1B) Connect negative probe to ground or 14Z and positive probe to 1Y. If 24 volts dc is obtained, the Clutch Dog switch is good. If not, replace switch.
Same as above	Same as above, also: Close Clamp switch (pedal)	(1C) With the voltmeter on the 50 volt dc scale, connect the negative probe to 14Z and the positive probe to 12Z. If a 24 volt dc reading is obtained, this will indicate that the LOADING switch, the CLAMP SAFETY switch, and the Clamp switch (pedal) are good. If no voltage is indicated make a continuity check through each switch and replace the faulty one.
Same as above	Same as above	(1D) Set the voltmeter to the 150 volt ac scale, and check the voltage between 16Y and TP27. It should read 115 volts, ac. If it does, it indicates that the components on the circuit board are good. Perform next step.
Same as above	MAIN SWITCH __Push to Stop	[1E] Set the meter to the X10 ohms scale, and check between 16Y and TP27. The reading should be approximately 80 ohms. If it is not, replace the clamp solenoid.
Clamp goes up at wrong time.	MAIN SWITCH __Pull to Start CLAMP TABLE __Back SELECTOR _____ELEC	(1F) Set voltmeter to the 50 volt dc scale. Connect the negative probe to ground or 14Z, and the positive probe to 5Y. If voltage is present trouble is in one or both of the UNLOADING circuit boards or the automatic clamp-up circuit. Replace faulty board.
Clamp tends to jump up before fingers rise.	MAIN SWITCH __Pull to Start CLAMP TABLE __Forward FINGERS _____SEMI* SELECTOR _____ P & E LOADING _____ MAN FRONT *Do not allow fingers to raise and activate the auto clamp up circuit.	(1G) Set voltmeter to the 50 volt dc scale. Connect the negative probe to ground or 14Z and the positive probe to 5Y. If no voltage reading is obtained, the Auto Clamp Up relay (RL7) and the Fingers Down switch are good. If 24 volts dc is present, the circuit board or the Fingers Down switch is bad. Make a continuity check through the switch and, if bad, replace. If the switch is good, replace the circuit board.

1. CLAMP CIRCUIT TROUBLESHOOTING CHART

Clamp will not raise automatically when it should.	MAIN SWITCH____ Pull to Start SELECTOR_____ P & E CLAMP TABLE___ Forward LOADING_____ MAN FRONT	1H	Set voltmeter to the 50 volt dc scale. Connect the negative probe to ground or 14Z and the positive probe to 2Y. If a 24 volt dc reading is obtained, the Clamp Table Forward switch is good. If not, replace switch.
Same as above	Same as above	1I	Set the voltmeter to the 50 volt dc scale. Connect the negative probe to 14Z and the positive probe to 7Z. If a 24 volt dc reading is obtained the LOADING switch is good. If not, replace switch.
Same as above	Same as above, also: _____ FINGERS UP	1J	Set voltmeter to the 50 volt dc scale. Connect the negative probe to ground or 14Z and the positive probe to TP18. If a 24 volt dc reading is obtained, the Fingers Down switch is good. If not, replace switch.
Same as above	Same as above, also: _____ FINGERS SEMI or AUTO	1K	Set voltmeter to the 50 volt dc scale. Connect the negative probe to ground or 14Z and the positive probe to TP23. If a 24 volt dc reading is obtained, the circuit board components and the FINGERS DOWN switch are good. If not, check switch and then replace board if necessary.
Same as above	Same as above	1L	Set the voltmeter to the 50 volt dc scale. Connect the negative probe to 14Z and the positive probe to 5Y. If a 24 volt dc reading is obtained, the Auto Clamp-Up switch is good. If not, replace switch.
Same as above	Same as above, also: _____ CLAMP SAFETY NORM	1M	Set the voltmeter to the 50 volt dc scale. Connect the negative probe to ground or 14Z and the positive probe to 12Z. If a 24 volt dc reading is obtained, the CLAMP SAFETY switch is good. If not, replace the switch.
Same as above	Same as above		Repeat steps 1D and 1E

2. CLAMP TABLE CONTROL CIRCUIT A25

GENERAL DESCRIPTION

The function of the Clamp Table control circuit is to move the clamp table to the back position for start of the sew function. The Clamp Table can be moved to the back position in two ways:

(1) By turning the CLAMP CLEARING switch on the front panel to the BACK position. (LOADING switch must be in the MAN FRONT or MAN BACK position.)

(2) By closing Clamp Table Back (pedal) switch.

In each case, the Clamp Table is returned to the forward position by breaking the holding circuit. In the first case this is done by turning the CLAMP CLEARING switch to FORWD and in the second case, the holding circuit is broken when the sew cycle starts, by deactuation of the Clutch Dog switch.

CIRCUIT DESCRIPTION

The CLAMP TABLE solenoid operates on 115 volts ac when its circuit is completed through Clamp Table triac Q5. Triac Q5 will conduct the 115 volts ac when 24 volts dc is applied to its gate terminal. The 24 volts dc is applied directly to the gate terminal of Q5 and to the coil and contacts of Clamp Table Back relay (CR5) when Clamp Table Back switch is closed. This 24 volts dc comes through the Fingers Down Safety switch when the fingers are down and the switch is closed.

When the CR5 coil is energized, the contacts close and allow 24 volts dc through blocking diode D13 which is a holding circuit that keeps the coil energized and the triac gated and holds the Clamp Table in the back position. This circuit is completed through the CLAMP CLEARING switch, the Clutch Dog switch (which is closed when the machine is not sewing) and the Fingers Down Safety switch.

When the CLAMP CLEARING switch is set to the BACK position, it will provide a path for 24 volts dc to the CR5 coil. The 24 volts dc will be available through the Fingers Down Safety switch, Clutch Dog switch and the CLAMP CLEARING switch to the CR5 coil.

When the Clamp Table is not in the forward position, 24 volts dc is available to the CR5 coil to hold it back until the circuit is opened by the Clutch Dog switch or CLAMP CLEARING switch when actuated manually to the FORWD position.

The Length Safety switch will close and hold the Clamp Table back in an oscillating condition whenever the sewing circuit does not function properly. This will prevent oversewing of the pocket.

2. CLAMPTABLE CIRCUIT WIRING DIAGRAM

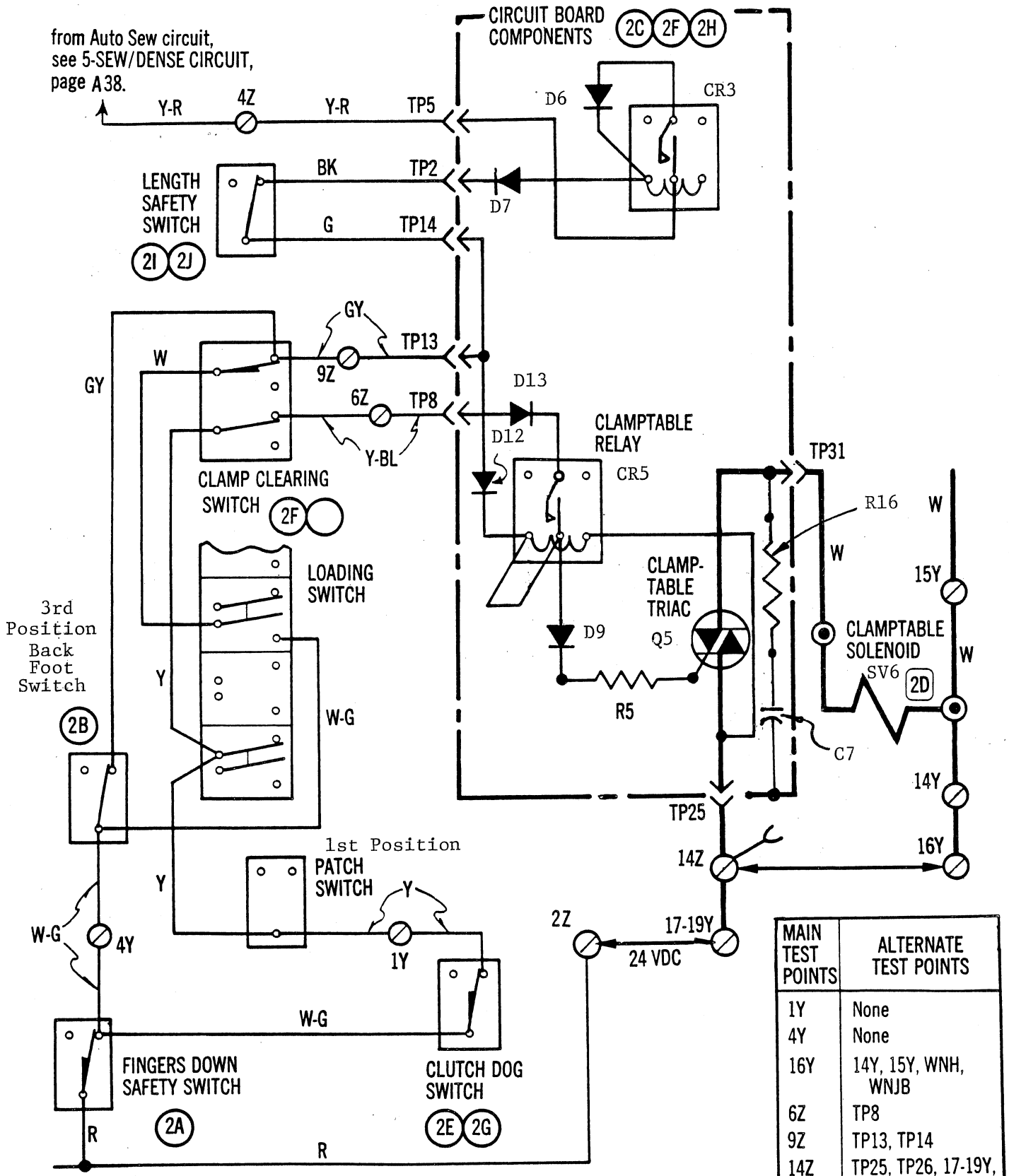

MAIN TEST POINTS	ALTERNATE TEST POINTS
1Y	None
4Y	None
16Y	14Y, 15Y, WNH, WNJB
6Z	TP8
9Z	TP13, TP14
14Z	TP25, TP26, 17-19Y, FRAME
TP2	None
TP31	WNJB

2. CLAMP TABLE CIRCUIT TROUBLESHOOTING CHART A27

SYMPTOM	*MACHINE CONDITIONS*	*TEST-REMEDY*
Clamp Table will not go to back position.	MAIN SWITCH ____ Pull to Start SELECTOR _____ P & E LOADING _____ MAN FRONT or MAN BACK	(2A) Set the voltmeter to 50 volts dc. Connect the negative probe to ground or 14Z and the positive probe to 4Y. If a 24 volt dc reading is obtained, the Fingers Down Safety switch is good. If not, replace switch.
Same as above	Same as above, also: Close Clamp Table, Back Switch (pedal)	(2B) With the voltmeter set to the 50 volts dc scale, connect the negative probe to ground or 14Z and the positive probe to 9Z. If a 24 volt dc reading is obtained, Clamp Table, Back Switch (pedal) is good. If not, replace switch.
Same as above	Same as above	(2C) Set voltmeter to the 150 volt ac scale. Connect one probe to 16Y and the other probe to TP31. If a reading of 115 volts ac is obtained, the circuit board components are good. If not, replace circuit board.
Same as above	MAIN SWITCH ____ Push to Stop	[2D] Set the meter to the X10 ohms scale. Connect the probes to 16Y and TP31. The meter should read approximately 80 ohms. If it does not, replace the clamp table solenoid.
Clamp Table will not stay back.	MAIN SWITCH ____ Pull to Start SELECTOR _____ P & E LOADING _____ MAN FRONT or MAN BACK	(2E) Set the voltmeter to the 50 volt dc scale. Connect the negative probe to ground or 14Z and the positive probe to 1Y. If a 24 volt dc reading is obtained, the Clutch Dog switch is good. If not, replace switch.
Same as above	Same as above	(2F) With the negative probe still connected to 14Z, connect the positive probe to 6Z. A 24 volt dc reading indicates that the CLAMP CLEARING switch is good. If this reading is not obtained, replace the switch. Check at Alternate TP8. A 24 volt dc reading indicates circuit board is good. If not replace circuit board.

2. CLAMP TABLE TROUBLESHOOTING CHART

SYMPTOM	MACHINE CONDITIONS	TEST-REMEDY
Clamp Table will not feed forward while sewing.	MAIN SWITCH ____ Pull to Start SELECTOR _____ P & E CLAMP TABLE ____ Back LOADING _____ MAN BACK Close and release knee switch.	(2G) Connect the negative probe to ground or 14Z and the positive probe to 1Y. If no voltage reading is obtained, the Clutch Dog switch is good. If a voltage reading is obtained, replace the switch. NOTE: If clamp table will not feed forward while sewing, connect the negative probe to ground or 14Z and the positive probe to 9Z. If a 24 volt dc reading is obtained, either Clamp Table, Back Switch (pedal) or the Length Safety switch are faulty. Make a continuity check through each, and replace faulty switch.
Same as above	Same as above	(2H) Set the voltmeter to the 150 volt ac scale. Connect one probe to 16Y and the other probe to TP31. If 115 volts ac is present, replace the circuit board.
Length Safety not returning table	MAIN SWITCH ____ Pull to Start CLAMP TABLE ____ Back LOADING ____ ____ MAN BACK SELECTOR _____ ELEC Actuate knee switch to energize start sewing solenoid.	(2I) Set voltmeter to 50 volt dc scale. Connect the negative probe to ground or 14Z, and the positive probe to 9Z. Manually close the Length Safety Switch. A reading of 24 volts dc should be obtained. If voltage is not present, reset the Length Safety switch actuator block.
Same as above	Same as above	(2J) Set the voltmeter to the 50 volt dc scale. Connect the negative probe to ground or 14Z and the positive probe to TP2. If a 24 volt dc reading is obtained, check the Sew/Center Dense Circuit (5).
Clamp Table returns to back position at end of sewing cycle.	(Reference only)	Check adjustment of Length Safety switch in relation to Length switch. (Refer to Switch Adjustment Section.)

3. PATCH FOLDING CIRCUIT

GENERAL DESCRIPTION

The function of the Patch Folding circuit is to open the patch folder (brushes) for patch loading. The patch folder may be opened when the Clamp Table is in the AUTO FRONT or AUTO BACK position. The patch folder (brushes) can be opened in any of the following ways:

(1) With the Clamp Table in the back position, closing Patch Switch (pedal) will open the patch folder (brushes).

(2) Whenever the Clamp Table moves forward and the Clamp Table Forward switch closes, the patch folder (brushes) will open.

(3) Whenever the LOADING switch is in the AUTO FRONT position, and the Clamp Table moves to the back position, the patch folder (brushes) will stay open until the patch is automatically inserted; and will then close when the Patch Loader switch is actuated.

CIRCUIT DESCRIPTION

The patch solenoid is energized by 115 volts ac when its 115 volt circuit is completed through triac Q4 The triac conducts the 115 volts ac when 24 volts dc is applied to its gate terminal. The 24 volts dc to operate the triac may be received through three different paths depending upon the functional operation of the machine.

Whenever the Clamp Table moves forward, and closes Clamp Table Forward switch, 24 volts dc is supplied directly through blocking diode D11 to the Q4 gate terminal. With the LOADING switch in the AUTO FRONT position, a holding circuit is set up through Patch switch (pedal) by energizing relay CR4. and closing the relay contacts, making a holding circuit through the Clamp Table Forward switch (deactivated), Patch Loader switch and CR4 relay. The patch folder (brushes) will remain open until the patch loader arm actuates the patch loader switch, or when the Table Clamp Forward switch is deactivated.

The 24 volts dc for the holding circuit is supplied through the Table Forward switch in the back position, the LOADING switch in AUTO position, the Patch Loader switch in the normally closed position, and blocking diode D8.

Whenever Clamp Table is back, and the Fingers Down Safety switch is closed, the 24 volts to energize to CR4 coil and triac Q4 will be supplied when Patch Switch (pedal) is closed, and the patch folder (brushes) will open.

3. PATCH FOLDING CIRCUIT WIRING DIAGRAM

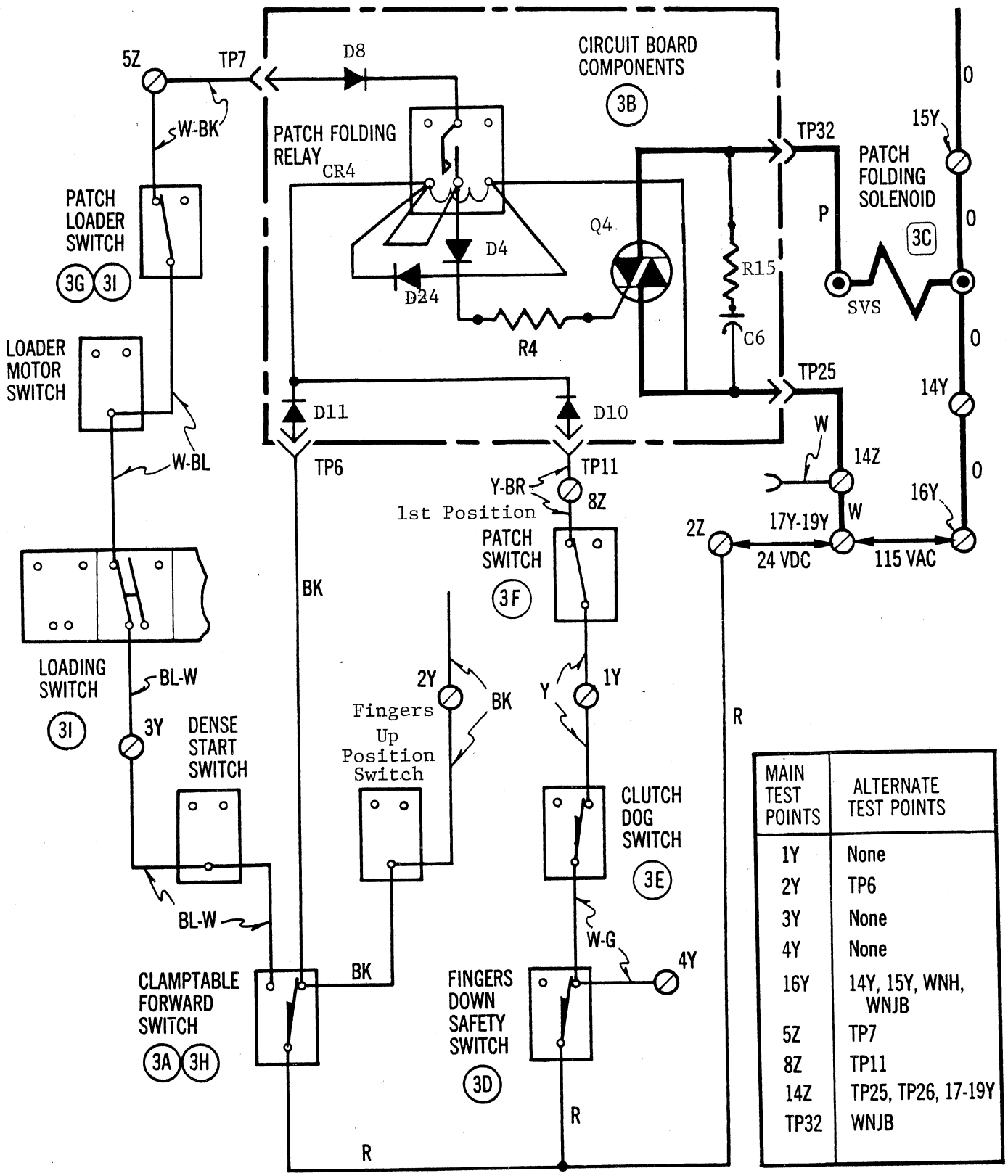

MAIN TEST POINTS	ALTERNATE TEST POINTS
1Y	None
2Y	TP6
3Y	None
4Y	None
16Y	14Y, 15Y, WNH, WNJB
5Z	TP7
8Z	TP11
14Z	TP25, TP26, 17-19Y
TP32	WNJB

3. PATCH FOLDING CIRCUIT TROUBLESHOOTING CHART

SYMPTOM	MACHINE CONDITIONS	TEST-REMEDY
Patch folders not open in front position	MAIN SWITCH ____ Pull to Start SELECTOR _____ P & E	(3A) Set voltmeter to the 50 volt dc scale. Connect the negative probe to ground or 14Z and the positive probe to 2Y. If a 24 volt dc reading is obtained, the Clamp Table Forward switch is good., If not, replace switch.
Same as above	Same as above	(3B) Set voltmeter to the 150 volt ac scale. Connect one probe to 16Y and the other probe to TP32. If the meter reads 115 volts ac, the circuit board components are good. If not, replace circuit board.
Same as above	MAIN SWITCH ____ Push to Stop	[3C] Set the meter to the X10 ohms scale. Connect the probes between 16Y and TP32. The meter should read approximately 80 ohms. If it does not, replace the patch folding solenoid.
Patch folders will not open when Patch switch (pedal) is closed.	MAIN SWITCH ____ Pull to Start CLAMP TABLE ____ Back SELECTOR _____ P & E	(3D) Set voltmeter to the 50 volt dc scale. Connect the negative probe to ground or 14Z and the positive probe to 4Y. If a 24 volt dc reading is obtained, the Fingers Down Safety switch is good. If not, replace switch.
Same as above	Same as above	(3E) Set voltmeter to the 50 volt dc scale. Connect the negative probe to ground or 14Z and the positive probe to 1Y. If a 24 volt dc reading is obtained, the Clutch Dog switch is good. If not, replace switch.
Same as above	Same as above, also: LOADING _____ MAN FRONT or MAN BACK Patch switch _____ Closed	(3F) Set voltmeter to the 50 volt dc scale. Connect the negative probe to ground or 14Z and the positive probe to 8Z. If a 24 volt dc reading is obtained, the Patch switch (pedal) is good. If not, replace switch.

3. PATCH FOLDING CIRCUIT TROUBLESHOOTING CHART

SYMPTOM	MACHINE CONDITIONS	TEST-REMEDY
Patch folders will not close when loader arm goes in.	MAIN SWITCH __ Pull to Start CLAMP TABLE __ Back SELECTOR ____ ELEC LOADING _____ AUTO FRONT	(3G) Set voltmeter to the 50 volt dc scale. Connect the negative probe to ground or 14Z, and the positive probe to 5Z. The meter should read 24 volts dc until the loader arm goes all the way in. At this point the circuit should open. If it does not, reset the Patch Loader switch.
Patch folders will not stay open on AUTO cycle.	MAIN SWITCH __ Pull to Start SELECTOR ____ P & E LOADING _____ AUTO FRONT	(3H) Set voltmeter to the 50 volt dc scale. Connect the negative probe to ground or 14Z and the positive probe to 3Y. If a 24 volt dc reading is obtained, the Table Forward switch is good. If not, replace switch.
Same as above	Same as above CLAMP TABLE - Back	(3I) Set voltmeter to the 50 volt dc scale. Connect the negative probe to ground or 14Z and the positive probe to 5Z. If a 24 volt dc reading is obtained, the LOADING switch and the Patch Loader switch are good. If not, replace faulty switch. Check for 24 volts dc at Alternate TP7. If 24 volts dc is present, replace circuit board.

4. AUTOMATIC PATCH LOADING CIRCUIT A33

GENERAL DESCRIPTION

The automatic patch loader motor circuit is an automatic feature of the Reece Series 32 Welting Machine which allows automatic feeding of patches for increased production speed. It operates with the LOADING switch set to AUTO FRONT or AUTO BACK positions, for normal operation. It can be operated in the MAN FRONT and MAN BACK position of the LOADING switch for the purpose of adjusting the position of the drive.

It is actuated to start when the Automatic Patch Loader (auto) Start switch (APL Motor Start-auto Switch) is closed; which happens when the Clamp table is all the way back. When the loading arm swings into position to load a patch, it closes the Patch Loader switch, which breaks the patch open holding circuit and closes the patch folder (brushes). Position of the arm is controlled by an eccentric cam on the loader motor. The arm then reverses direction and starts back. On the way back it actuates the Auto Sewing switch and starts the machine sewing. When the arm reaches the rest position it opens the Loader Motor switch which breaks the circuit to the motor and stops it.

For adjustment purposes, the loader motor can be operated with the Control panel LOADING switch in the MAN FRONT or MAN BACK positions. The CLAMP SAFETY switch is in the REP position and the motor is actuated by the knee control. The arm moves only while the knee control is pressed, and it can be actuated in small increments by repeated pressing of the knee switch.

CIRCUIT DESCRIPTION

The Patch Loader Motor operates on 115 volts ac when its circuit is completed through triac Q7. Triac Q7 conducts 115 volts ac when 24 volts dc is applied to its gate terminal.

In normal operation of the patch loader motor, the Control Panel LOADING Switch is set to AUTO FRONT. When the Clamp Table goes back, it actuates the APL Motor Start (auto) switch to start the loader motor. The 24 volts dc is then supplied through the Fingers Down Safety Switch, the Clutch Dog Switch, and Patch Switch (pedal) which is in the normally closed position. As shown in the wiring diagram, the 24 volts dc then goes through blocking diode D27, and APL Motor Auto Start Switch) and LOADING Switch Contacts A, through the Auto Sewing switch (in the normally closed position, and then to the gate terminal of the triac.)

In automatic operation, Patch Switch (pedal) acts as a *safety switch* to stop an automatic cycle in the event that a patch is not loaded properly, and if depressed before Auto Sewing switch is actuated.

The Patch Loader motor holding circuit is made by supplying 24 volts dc from the Clamp Table Forward switch through Control panel LOADING switch contacts B, and the Loader Motor switch, to the triac. The circuit is broken when the arm actuates the Loader Motor switch back at the rest position.

When the loader motor is operated with the LOADING switch in the MAN FRONT or MAN BACK position, pressing the knee Control completes a path through the CLAMP SAFETY switch (in the REP position) from the Length and Clamp Table Forward switches.

A34 4. AUTOMATIC PATCH LOADING CIRCUIT WIRING DIAGRAM

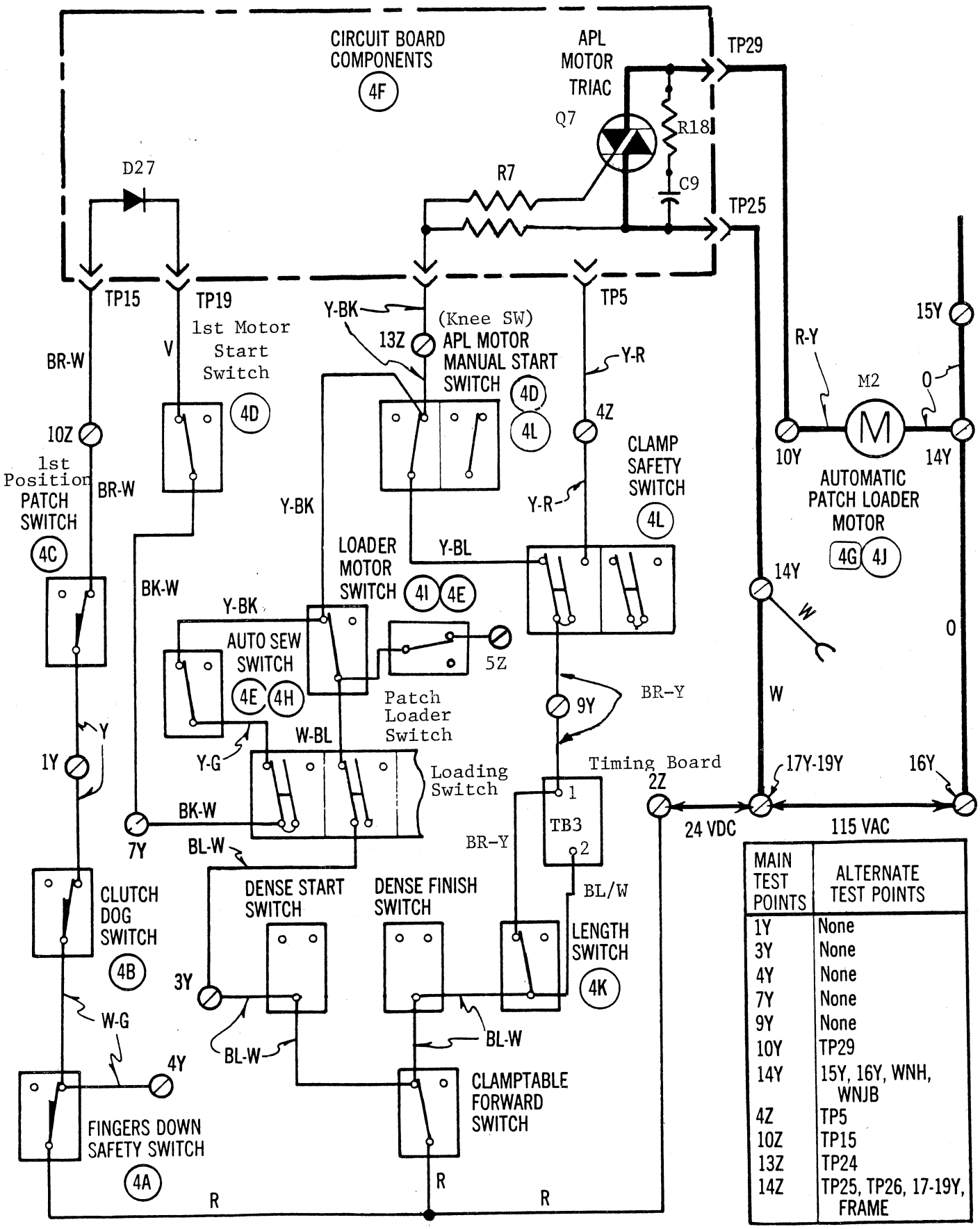

MAIN TEST POINTS	ALTERNATE TEST POINTS
1Y	None
3Y	None
4Y	None
7Y	None
9Y	None
10Y	TP29
14Y	15Y, 16Y, WNH, WNJB
4Z	TP5
10Z	TP15
13Z	TP24
14Z	TP25, TP26, 17-19Y, FRAME

SYMPTOM	MACHINE CONDITIONS	TEST-REMEDY
Patch Loader will not start.	MAIN SWITCH ____ Pull to Start SELECTOR _____ P & E CLAMP TABLE ____ Back LOADING _____ AUTO FRONT	(4A) Set voltmeter to the 50 volt dc scale. Connect the negative probe to ground or 14Z, and the positive probe to 4Y. If a 24 volt dc reading is obtained, the Fingers Down Safety switch is good. If not, replace switch.
Same as above	Same as above	(4B) Connect the negative probe to ground or 14Z, and the positive probe to 1Y. If a 24 volt dc reading is obtained, the Clutch Dog switch is good. If not, replace switch.
Same as above	Same as above	(4C) Connect the negative probe to ground or 14Z, and the positive probe to 10Z. If a 24 volt dc reading is obtained, the Patch switch (pedal) is good. If not, replace switch.
Same as above	Same as above	(4D) Connect the negative probe to ground or 14Z, and the positive probe to 7Y. If a 24 volt dc reading is obtained, the APL Motor (auto) Start switch is good. If not, replace switch.
Same as above	Same as above	(4E) Connect the negative probe to ground or 14Z, and the positive probe to 13Z. If a 24 volt dc reading is obtained, the Loader Motor switch and the Auto Sewing switch are both good. If not, replace faulty switch. (The Auto Sewing switch would most probably be the faulty one.
Same as above	Same as above	(4F) Set the voltmeter to the 150 volt ac scale. Connect the probes to 14Y and 10Y. If a reading of 115 volts ac is obtained, the circuit board components are good. If not, replace board.
Same as above	MAIN SWITCH ____ Push to Stop	[4G] Set the meter to the X10 ohms scale. Connect the probes to 14Y and 10Y. If a reading of approximately 10 ohms is obtained, the Patch Loader Motor is good. If not, replace motor.

A36 4. AUTOMATIC PATCH LOADING CIRCUIT TROUBLESHOOTING

SYMPTOM	MACHINE CONDITIONS	TEST-REMEDY
Machine Starts sewing when loader arm goes in.	MAIN SWITCH ___ Pull to Start CLAMP TABLE ___ Back SELECTOR _____ ELEC LOADING _____ AUTO FRONT	(4H) VISUAL CHECK. Roller lever on Automatic Sew switch is closing when arm goes in. Readjust switch (See page A58.) Also check Patch Folding Safety switch.
Patch Loader Motor does not stop when machine is sewing.	MAIN SWITCH ___ Pull to Start SELECTOR _____ P & E LOADING _____ AUTO FRONT LOADER SEW ___ ON Remove patch tray arm. CLAMP TABLE ___ Back Sewing circuit energized	(4I) Set voltmeter to the 50 volt dc scale. Connect the negative probe to ground or 14Z and the positive probe to 13Z. The 24 volt dc circuit should be broken when the Loader Motor switch is actuated. If it is not, replace the Loader Motor switch.
Same as above	Same as above	(4J) VISUAL CHECK. Check motor brake to see that motor does not coast beyond the opening of Loader Motor switch.
Machine fails to sew after Patch Loader Motor Circuit is checked.	(Reference only)	See Sew/Center Dense Circuit Troubleshooting Chart page A39.
Patch loader will not start in MANUAL operation for maintenance adjustments.	MAIN SWITCH ___ Pull to Start SELECTOR _____ P & E LOADING _____ MAN FRONT CLAMP SAFETY _ REP CLAMP TABLE ___ Back Knee switch ___ Closed	(4K) Set voltmeter to the 50 volt dc scale. Connect the negative probe to ground or 14Z and the positive probe to 9Y. If a 24 volt dc reading is obtained, the Length switch is good. If not, replace switch.
Same as above	Same as above	(4L) Set voltmeter to the 50 volt dc scale. Connect the negative probe to ground or 14Z and the positive probe to 13Z. If a 24 volt dc reading is obtained, the APL Motor Manual Start Switch and CLAMP SAFETY switch are good. If not, replace faulty switch.

4.A. CLAMP FINGERS (PART OF PATCH LOADER) (OPTION) A37

GENERAL DESCRIPTION

Clamp fingers actuate to hold the welting patch and pellon in position while the loader arm swings into position. To vary the speed of the clamp fingers, a flow control valve is located in the electrical panel.

The clamp fingers on the patch loader are closed when SVA is energized. The clamp fingers solenoid (SVA) operatest on 115 volts ac when its circuit is completed by the closing of CRA's contacts. 24 volts dc is supplied to CRA through the fingers down safety switch, S17 (limit switch-closed) and the 3rd position back foot switch, S18 (pedal). This will also send the table back. If loading switch, S4 (selector switch) is in auto back or auto front, then the clamp fingers will stay down (energized) until patch loader switch, S25 (limit switch) is opened. At this point, 24 volts dc will be removed from CRA causing CRA contacts to open and SVS to de-energize.

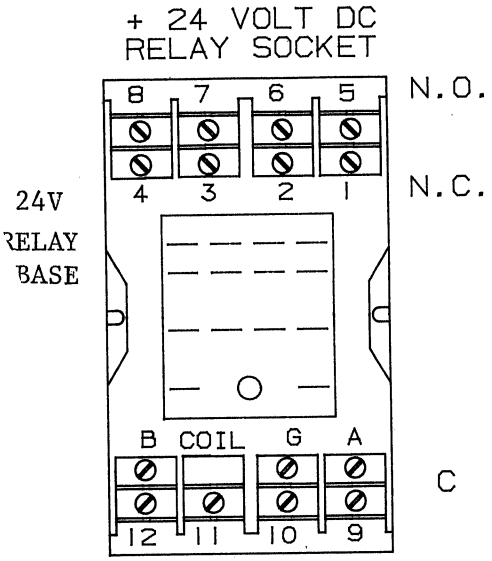

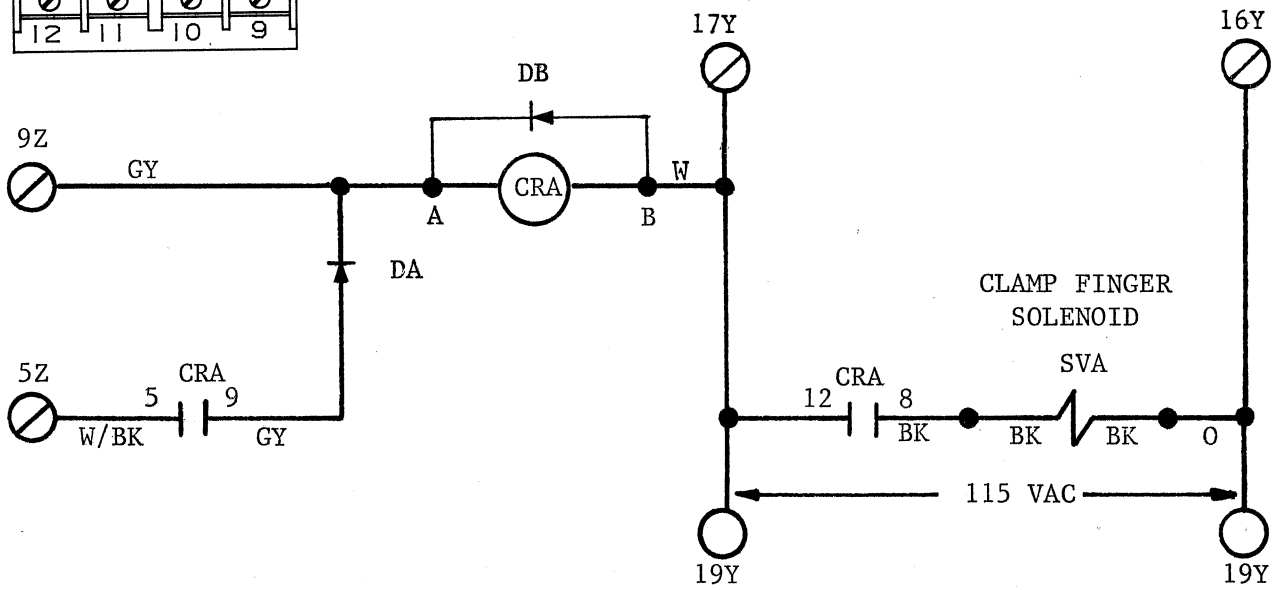

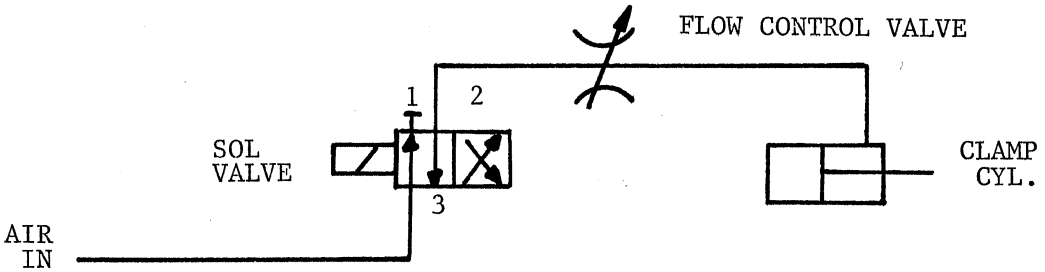

NOTES

5. SEW/CENTER DENSE CIRCUIT

GENERAL DESCRIPTION

The sew circuit starts the sewing function and operates the machine in sew mode until length and timing switches shifts operation back to the normal stop condition. The center dense circuit operates with the sew circuit to control the normal density of the stitches. The End circuit operates at the beginning and end of the sew cycle to provide increased stitch density. The sew function is started manually by the actuation of the knee control, and is started automatically when Auto Sewing switch is closed by movement of the loader arm.

CIRCUIT DESCRIPTION

The start sewing and center dense solenoids are energized at the same time when the 115 volt ac circuit is completed through sew/center dense triac Q2. A 0.6 ampere safety fuse in series between the triac and coil protects the start sewing solenoid from current overload. This circuit is wired to operate in conjunction with the stop circuit so that it is always controlled by either sew or stop.

The sew/stop relay CR2 is a double contact relay which remains normally in a closed (stop) position whenever the sew circuit is not completed. In this condition, 24 volts dc is always applied to keep the stop solenoid energized and prevent sewing.

Sewing is initiated by the knee control or Auto Sewing switch when Clamp table is in BACK position and there are no safety circuits open to prevent operation of triac Q2.

The sew solenoid is energized when the 24 volts dc is shifted from the stop circuit to the sew circuit by shifting of the CR2 contacts from the stop position to the sew position. The CR2 coil is energized when the contacts of CR3 are closed. CR3 is closed when 24 vdc is applied to its coil through the Fingers Down Safety switch, the Clutch Dog switch, Patch switch (pedal), APL Motor (auto) Start Switch and the LOADING switch. From this point the voltage path depends on the position of the LOADING switch. In the AUTO positions voltage is available through the Auto Sewing switch, the Loader Sew switch, the Patch Folding Safety switch, and diode D5 to the coil of CR3. In the MAN positions, voltage is available through the Knee Sewing switch, the Patch Folding Safety switch, and diode D5 to the coil of CR3.

When the coil is energized, a holding circuit is made by providing 24 volts dc from Clamp Table Forward switch through the Length, Timing, and CLAMP SAFETY switches to the contacts of CR3. The 24 volts dc from the CR3 contacts is also returned, through diode D6, to the coil of CR3 as a holding voltage.

A path for 24 volts dc is also provided through diode D7 to Clamp table control circuit to hold table back while sewing as long as the Length Safety switch remains closed. This prevents oversewing of the pocket in the event the Length or Timing switch fails to stop the sewing and the Length Safety switch is actuated.

5. SEW/CENTER DENSE CIRCUIT WIRING DIAGRAM

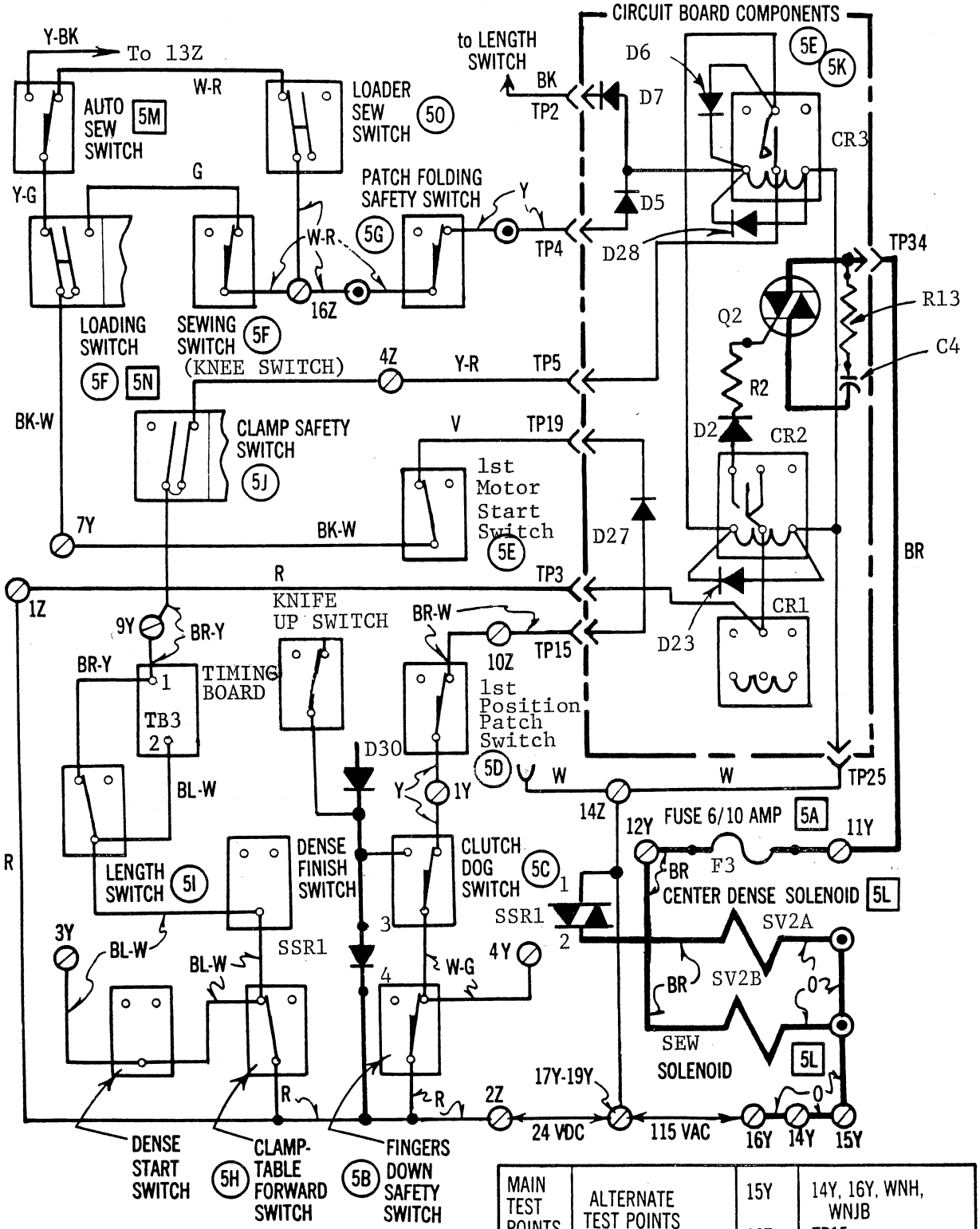

MAIN TEST POINTS	ALTERNATE TEST POINTS		
		15Y	14Y, 16Y, WNH, WNJB
		10Z	TP15
1Y	None	14Z	TP25, TP26, 17-19Y, FRAME
3Y	None		
4Y	None	16Z	WNJB
7Y	None	4Z	TP5
9Y	None	TP2	None
11Y	TP34	TP4	WNJB
12Y	WNJB	TP19	None

5. SEW/CENTER DENSE CIRCUIT TROUBLESHOOTING CHART

SYMPTOM	MACHINE CONDITIONS	TEST-REMEDY
Machine fails to sew in manual positions	MAIN SWITCH___ Push to Stop	5A Set meter on X10 ohms scale and check for continuity between 11Y and 12Y. If a reading is obtained (one or two ohms) the 0.6 ampere fuse is good. If meter reads infinity (∞), replace fuse.
Same as above	MAIN SWITCH___ Pull to Start SELECTOR_____ P & E CLAMP TABLE___ Back LOADING_____ MAN BACK or MAN FRONT CLAMP SAFETY___ Normal	5B Set voltmeter to the 50 volt dc scale. Connect the negative probe to ground or 14Z and the positive probe to 4Y. If a 24 volt dc reading is obtained, the Fingers Down Safety switch is good. If not, replace switch.
Same as above	Same as above	5C Set the voltmeter to the 50 volt dc scale. Connect the negative probe to ground or 14Z and the positive probe to 1Y. If a 24 volt dc reading is obtained, the Clutch Dog switch is good. If not, replace switch
Same as above	Same as above	5D Connect the negative probe to ground or 14Z and the positive probe to 10Z. If a 24 volt dc reading is obtained, the Patch switch (pedal) is good. If not, replace switch.
Same as above	Same as above	5E Connect the negative probe to ground or 14Z and the positive probe to TP19. If a 24 volt dc reading is obtained, diode SR1 is good. If not, replace the circuit board. Connect the positive probe to 7Y. If 24 volts dc is still not present, replace the APL Motor Auto Start switch.
Same as above	Same as above, also: Close Knee switch	5F Set the voltmeter to the 50 volt dc scale. Connect the negative probe to ground or 14Z, and the positive probe to 16Z. If a 24 volt dc reading is obtained, the LOADING switch and sewing switch are good. If not, replace first one switch, then the other if necessary and recheck.
Same as above	Same as above	5G Set the voltmeter to the 50 volt dc scale. Connect the negative probe to ground or 14Z and the positive probe to TP4. If a 24 volt dc reading is obtained, the Patch Folding Safety Switch is good. If not, replace switch.
Same as above	Same as above, also;	5H Set the voltmeter to the 50 volt dc scale. Connect the negative probe to ground or 14Z and the positive probe to 3Y. If a 24 volt dc reading is obtained, the Clamp Table Forward switch is good. If not, replace switch.

5. SEW/CENTER DENSE CIRCUIT TROUBLESHOOTING CHART

Same as above	Same as above	5I	Set the voltmeter to the 50 volt dc scale. Connect the negative probe to ground or 14Z and the positive probe to 9Y. If a 24 volt dc reading is obtained, the Length switch is good. If not, replace switch.
Same as above	Same as above	5J	Set the voltmeter to the 50 volt dc scale. Connect the negative probe to ground or 14Z and the positive probe to 4Z. If a 24 volt dc reading is obtained, the Clamp Safety switch is good. If not, replace the switch.
Same as above	Same as above, also: Press Knee Control	5K	Set the voltmeter to the 50 volt dc scale. Connect the negative probe to ground or 14Z and the positive probe to TP2. If a 24 volt dc reading is obtained, the circuit board components are good. If not, replace circuit board.
Same as above	MAIN SWITCH — Push to Stop	5L	Set the meter to the X10 ohms scale. Connect the probes between 15Y and 12Y. The meter should read approximately 25 ohms. If it does both Center Dense and Start Sewing solenoids are good. If the meter reads approximately 80 ohms, replace the Start Sewing solenoid. If the meter reads 30 ohms, replace the center dense solenoid.
Machine fails to sew in Auto positions.	MAIN SWITCH — Push to Stop Close Auto Sewing switch Open switch.	5M	Set meter to the X10 ohms scale. Make a continuity check through terminals (from yellow wire with green stripe to white wire with red stripe). If continuity is present, the switch is good in closed position. Repeat between yellow wire with green stripe to yellow wire with black stripe. If continuity is present Auto Sewing switch is good in normal position. If continuity is not present in both positions replace Auto Sewing switch.
Machine fails to sew in Auto positions.	MAIN SWITCH — Push to Stop LOADING ——— AUTO FRONT	5N	Set meter to the X10 ohms scale. Make continuity check through terminals of the LOADING switch at the black/white striped wire and the yellow/green striped wire. If continuity is present, the LOADING switch is good. If not, replace switch.
Same as above	MAIN SWITCH — Pull to Start LOADING ——— AUTO FRONT CLAMP TABLE — Back Auto Sewing Switch — Closed LOADER SEW — ON	5O	Set voltmeter to the 50 volt dc scale. Connect the negative probe to ground or 14Z and the positive probe to 16Z. If a 24 volt dc reading is obtained, the LOADER SEW panel switch is good. If not, replace switch.
Machine starts sewing when loader arm goes in.	(Reference only)		See Patch Loader Motor Circuit 4.
Machine fails to sew and Patch Loader keeps running.	(Reference only)		See Patch Loader Motor Circuit 4. IF MACHINE FAILS TO STOP SEWING, REFER TO STOP CIRCUIT 7.

6. END DENSE CIRCUIT

GENERAL DESCRIPTION

The function of the end dense circuit is to change the stitching at the start and at the end of the stitching cycle (ends of the pocket) from normal density (center group long stitches) to end density fine stitches. This is accomplished by energizing the end dense solenoid at the start of the stitching cycle and just before it reaches the end and stops sewing. This solenoid operates to control the density of the stitch at the beginning and end of the sewing cycle, by alternately operating through the Dense Start and Dense Finish switches for time controlled durations.

CIRCUIT DESCRIPTION

The end dense solenoid is energized when its 115 volt ac circuit is completed through triac Q8. Triac Q8 conducts the 115 volts ac when 24 volts dc is applied to its gate terminal.

The dense start circuit directs 24 volts dc to triac Q8 through the Clamp Table Forward and Dense Start switches when the Clamp table is in the back position. The Dense Start switch is actuated when the clamp table travels forward a short distance in a sewing cycle and opens the dense start circuit, thereby de-energizing the end dense solenoid.

The Dense Finish switch is actuated at the end of the pocket sewing cycle. It is ganged with the Length switch and actuated by the same lever when a block set on a roller bracket passes over the switch arm.

6. END DENSE CIRCUIT WIRING DIAGRAM

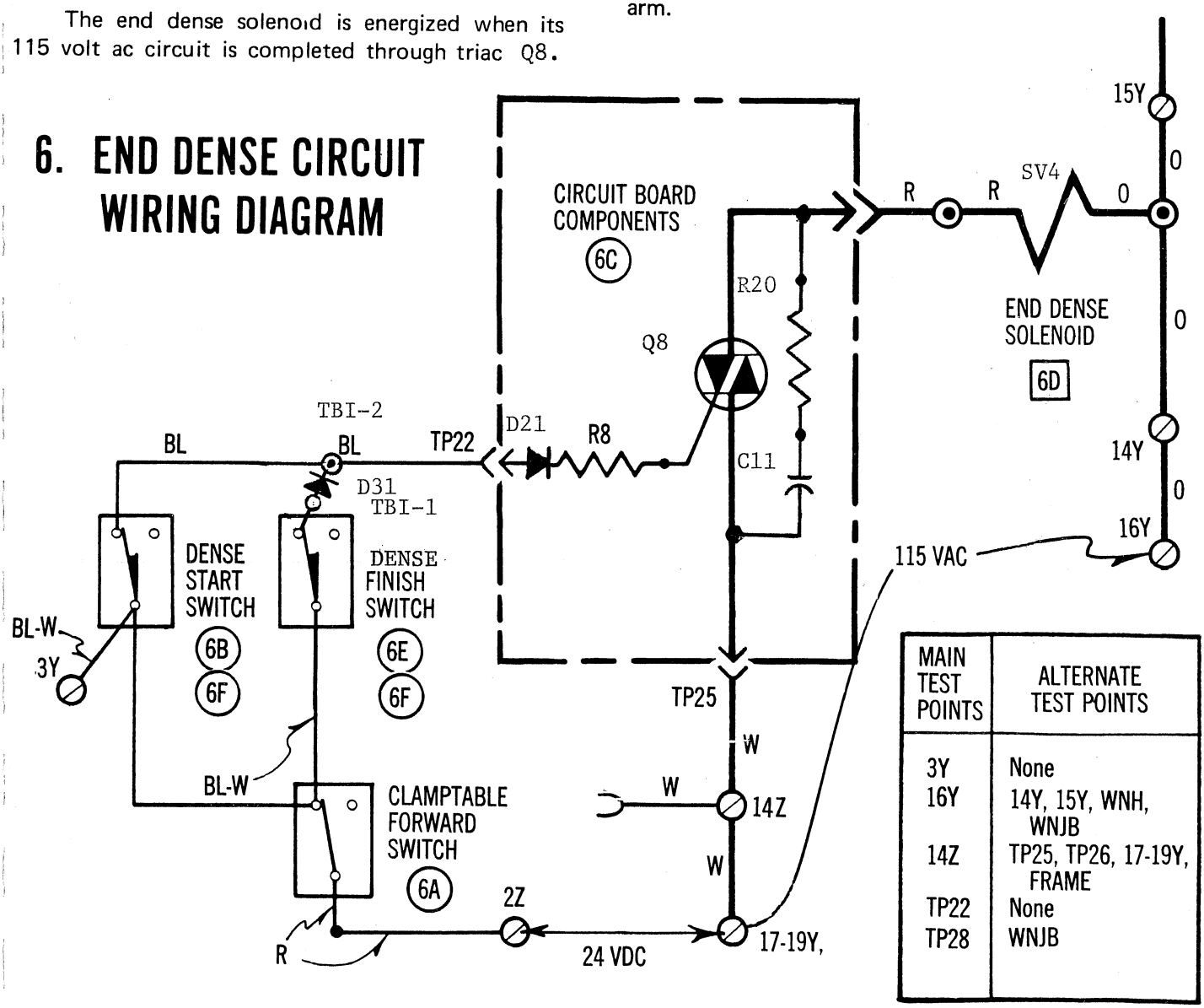

MAIN TEST POINTS	ALTERNATE TEST POINTS
3Y	None
16Y	14Y, 15Y, WNH, WNJB
14Z	TP25, TP26, 17-19Y, FRAME
TP22	None
TP28	WNJB

6. END DENSE CIRCUIT - TROUBLESHOOTING CHART

SYMPTOM	MACHINE CONDITIONS	TEST-REMEDY
No End Dense at start	MAIN SWITCH ____ Pull to Start SELECTOR _____ P & E CLAMP TABLE ____ Back	(6A) Set voltmeter to the 50 volt dc scale. Connect the negative probe to ground or 14Z, and the positive probe to 3Y. If a 24 volt dc reading is obtained, the Clamp Table Forward switch is good. If not, replace switch.
Same as above	Same as above	(6B) Set the voltmeter to the 50 volt dc scale. Connect the negative probe to ground or 14Z and the positive probe to TP22. If a 24 volt dc reading is obtained, the Dense Start Switch is good. If not, replace the switch.
Same as above	Same as above	(6C) Set the voltmeter to the 150 volt ac scale. Connect the probes to 16Y and TP28. If a 115 volt reading is obtained, the circuit board components are good. If not, replace the circuit board.
Same as above	MAIN SWITCH ____ Push to Stop	[6D] Set the meter to the X10 ohms scale. Connect the probes to 16Y and TP28. The meter should read approximately 80 ohms. If it does not, replace the end dense solenoid.
No End Dense at finish.	MAIN SWITCH _____ Pull to Start CLAMP TABLE ____ Back SELECTOR _____ ELEC Pull Clamp Table forward one half inch.	(6E) Set the voltmeter to the 50 volt dc scale. Connect the negative probe to ground or 14Z and the positive probe to TP22. Close the Dense Finish switch by hand. The meter should read 24 volts dc. If it does not, reset the Dense Finish switch.
Dense stitch through whole cycle.	Same as above	(6F) Set voltmeter to the 50 volt dc scale. Connect the negative probe to ground or 14Z and the positive probe to TP22. If a 24 volt dc reading is obtained, make a continuity check through the Dense Start and Dense Finish switches and replace faulty switch. (Continuity through either switch in this check indicates sticking contacts.)

7. STOP SEWING CIRCUIT

CIRCUIT DESCRIPTION

The stop sewing circuit operates in conjunction with the sew circuit. Whenever stop sewing solenoid is energized, the machine will not sew.

GENERAL DESCRIPTION

The stop solenoid is energized when the 115 volt ac circuit is completed through triac Q3. Triac Q3 conducts 115 volts ac to complete the circuit when 24 volts dc is applied to its gate terminal, which takes place when the sew/stop relay (CR2) contacts are in the normal stop position (CR2 coil not energized).

The sew relay, CR3, contacts remain closed, and the sew circuit functions when 24 volts dc is received through clamp safety, Timing, and Clamp Table Forward Switches. When machine is sewing, a holding circuit is provided through the Length, Timing, and Clamp Safety switches, Sew Relay CR3, and Diode D6 to the coil of Relay CR2 to stop sewing. The Length switch opens one leg of the 24 volt dc circuit, and the timing switch controls the final stopping. When these switches are open, the sew relay contacts will open, reestablishing the stop relay condition in which the contacts are closed to conduct 24 volts dc to triac Q3 thereby energizing the stop solenoid.

7. STOP SEWING CIRCUIT WIRING DIAGRAM

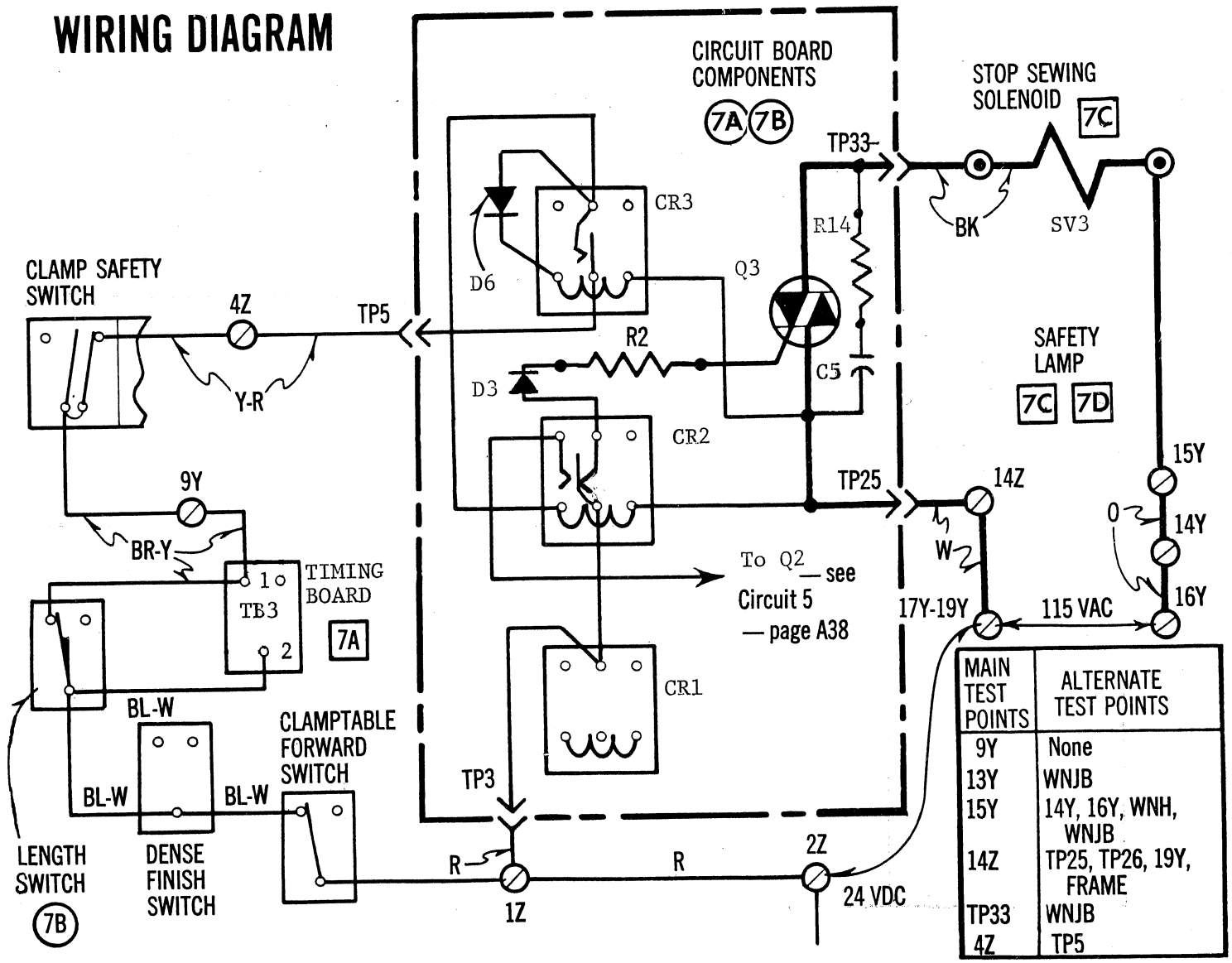

MAIN TEST POINTS	ALTERNATE TEST POINTS
9Y	None
13Y	WNJB
15Y	14Y, 16Y, WNH, WNJB
14Z	TP25, TP26, 19Y, FRAME
TP33	WNJB
4Z	TP5

7. STOP SEWING CIRCUIT TROUBLESHOOTING CHART

SYMPTOM	MACHINE CONDITIONS	TEST-REMEDY
Machine will not stop sewing	MAIN SWITCH ____ Pull to Start CLAMP TABLE ____ Back LOADING _____ MAN BACK SELECTOR _____ ELEC Knee control actuated (Energize sewing circuit by depressing knee control momentarily.)	7A Set the voltmeter to the 50 volt dc scale. Connect the negative probe to ground or 14Z and the positive probe to 9Y. The meter should read 24 volts dc. This circuit must be broken when Length switch is held open; then the voltmeter reading will drop to zero. If circuit is broken and start sewing solenoid is still energized, replace the main circuit board. If voltage stays at +24 volts dc, check prox. sensor and cam settings. If prox. and cam settings are correct, refer to timing adjustment section; replace timing P.C. board located behind main circuit board and below thread pick-up board.
Same as above	MAIN SWITCH ____ Pull to Start (Not sewing)	7B Set the voltmeter to the 150 volt ac scale. Connect the probes between 15Y and TP33. If a reading of 115 volts ac is obtained, the circuit board components are good. If not, replace the circuit board.
Same as above	MAIN SWITCH ____ Push to Stop	7C Set the meter to the X10 ohms scale. Connect the probes between 13Y and TP33. If a reading of approximately 30 ohms is obtained the stop sewing solenoid is good. If not, replace solenoid.
Same as above	Same as above	7D Check for continuity through bulb between 15Y and 13Y. Meter should read approximately 10 ohms. If not, replace with good bulb.

8. THREAD PICKUP CIRCUIT

GENERAL DESCRIPTION

The function of the thread pickup circuit is to operate the thread pickup fingers when sewing stops but before the thread is trimmed. The thread pickup switch is momentarily actuated by overthrow of the clutch dog stop motion as soon as the stop solenoid is energized. When the pickup fingers operate, they pick up the ends of thread after each sewing cycle in readiness for the next sewing cycle.

CIRCUIT DESCRIPTION

The thread pickup solenoid is energized by 115 volts ac when its circuit is completed through triac Q1. Triac Q1 conducts the 115 volts ac when 24 volts dc is applied to its gate terminal. The table back solenoid is energized by 115 volts ac when its circuit is completed through relay CRC to ground. This sends the table back during thread pickup finger extension.

The thread pickup sensor triggers a timer on the prox. thread pickup board. Adjusting R105 (see below) on the board clockwise will increase the length of time the thread pickup fingers will stay down. Adjustment counterclockwise will decrease the amount of time. This P.C. board, through relay CRC, will send the table towards the rear during thread pickup finger extension.

If a problem with the thread pickup operation is encountered, observe the sequence of operation and determine the area of probable cause using the troubleshooting chart below.

THREAD PICKUP TROUBLESHOOTING CHART

SYMPTOM	AREA OF PROBABLE CAUSE *
1. Thread pickup does not fire, Table goes back.	(A) 1. Main circuit board or connector. 2. SV1 w/ interlock. 3. Related wiring.
2. Table does not go back, Thread pickup fires OK.	(B) 1. CRC relay or socket. 2. SV6. 3. Related wiring.
3. Thread pickup does not fire, Table does not go back.	(C) 1. Proximity sensor. 2. Prox thread pickup board. 3. Related wiring.

* REFER TO THREAD PICKUP OPERATION DIAGRAM - NEXT PAGE

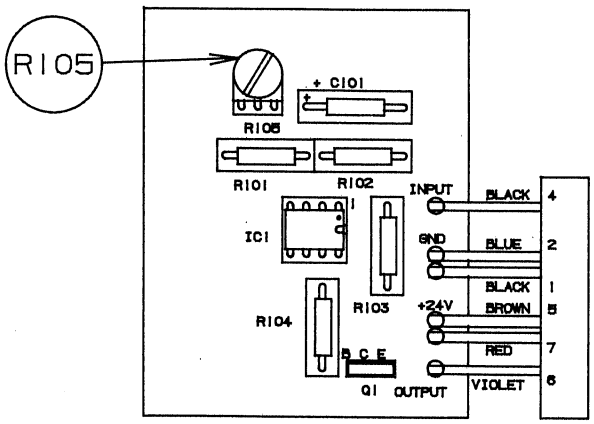

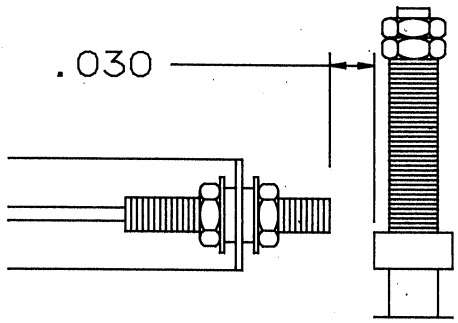

8. THREAD PICKUP CIRCUIT - WIRING DIAGRAM

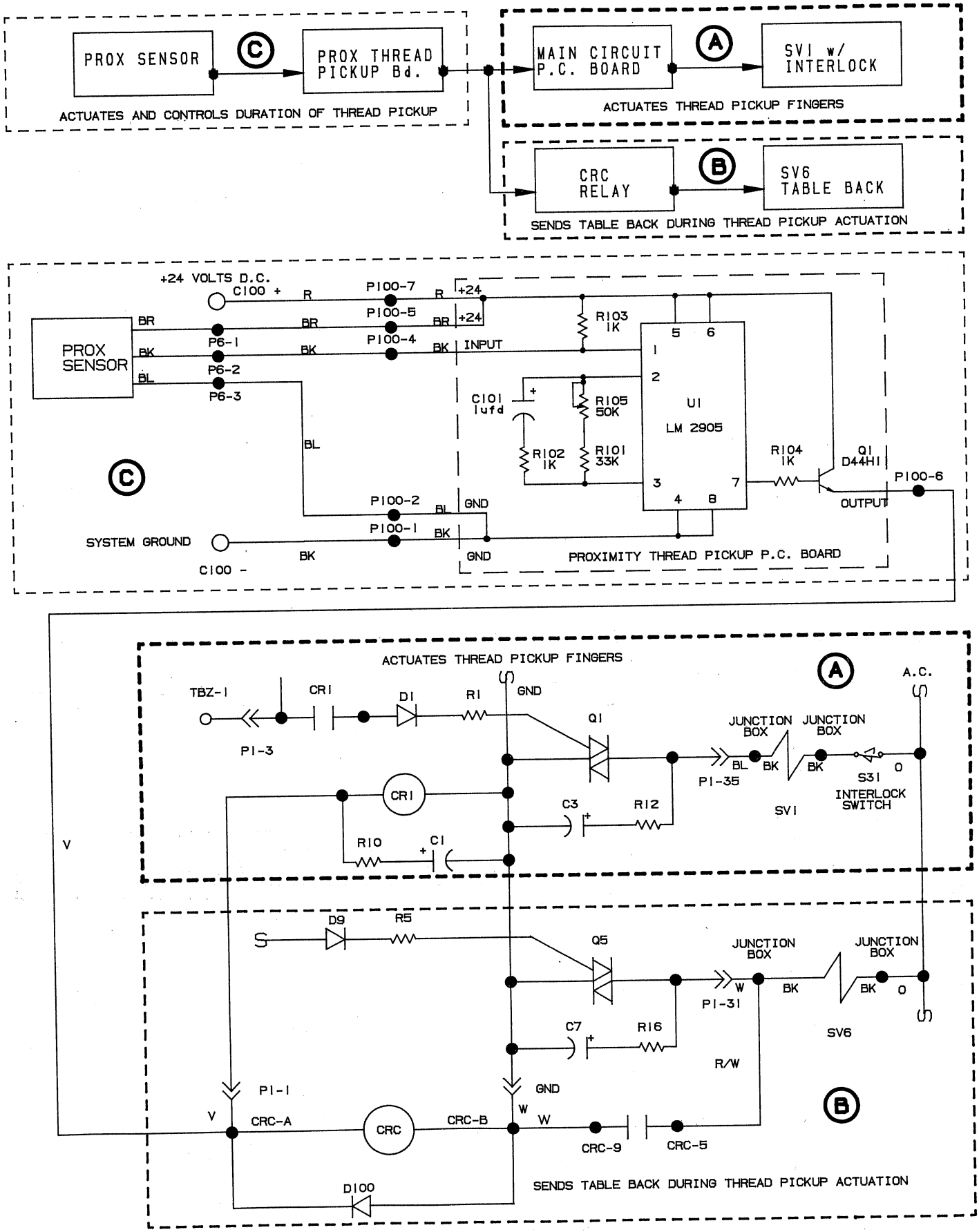

9. TAB KNIFE FINGERS CIRCUIT

GENERAL DESCRIPTION

The knife fingers rise through the center cut in the material, cutting tabs at the ends of the sewn pocket. The fingers can be actuated to move up in three ways:

(1) Semi-automatically, when the knee control is pressed, the fingers will rise and return to the down position.

(2) Automatically, at the end of a sew cycle, the fingers will rise and return to the down position.

(3) By turning the control panel FINGERS switch to the UP position. The fingers will rise.

If it is desired to raise the fingers to change the blades, this can be done by setting the control panel FINGERS switch to UP. They can be lowered again by turning the front panel FINGERS switch back to SEMI or AUTO.

CIRCUIT DESCRIPTION

The knife fingers solenoid is energized when the 115 volt ac circuit is completed through triac Q6. The triac conducts the 115 volts ac when 24 volts dc is applied to its gate terminal.

When the knife fingers are raised by setting the front panel FINGERS switch to AUTO, the voltage is available through the same path as in the SEMI position. The knife fingers will raise automatically when the Fingers Up switch is actuated.

When the Fingers Up switch is actuated, the knife fingers will stay in the raised position through means of a holding circuit provided through the Fingers Down switch.

When the contacts of relay CR6 are closed, a holding circuit is provided to the coil of relay CR6 through the Fingers Down switch.

When the knife fingers are raised by setting the front panel FINGERS switch to the UP position, the 24 volts dc is applied directly to the triac and the coil of the fingers up relay (CR6) through the Clamp Table Forward switch, if the table is in the forward position.

When the knife fingers are raised by setting the front panel FINGERS switch to the SEMI position, with the clamp table all the way forward, 24 voltage is applied to triac Q6 through the Clamp Table Forward, FINGERS, Turning and the Thread Monitor switches to relay CR6.

A50 TAB KNIVES CIRCUIT WIRING DIAGRAM

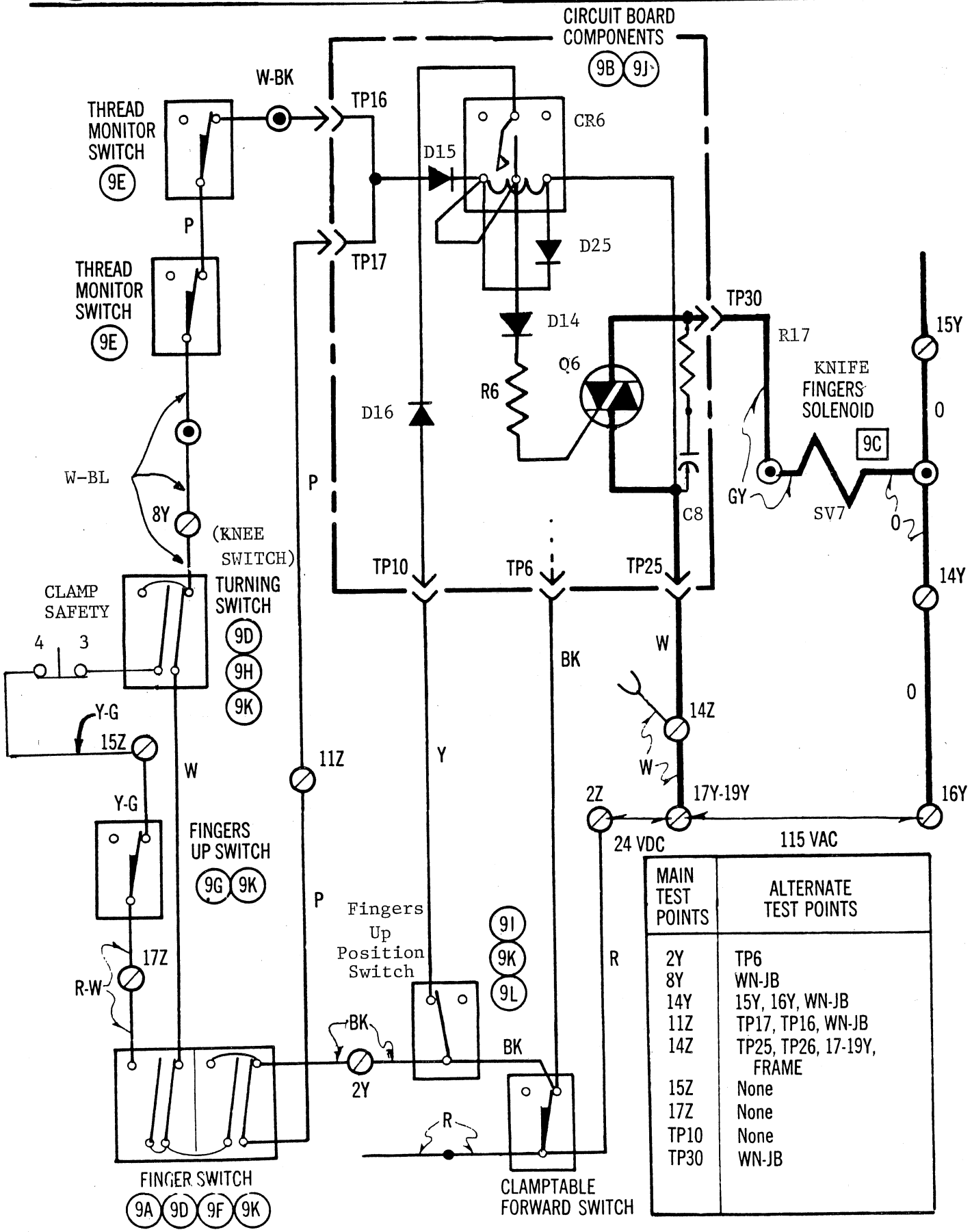

MAIN TEST POINTS	ALTERNATE TEST POINTS
2Y	TP6
8Y	WN-JB
14Y	15Y, 16Y, WN-JB
11Z	TP17, TP16, WN-JB
14Z	TP25, TP26, 17-19Y, FRAME
15Z	None
17Z	None
TP10	None
TP30	WN-JB

SYMPTOM	MACHINE CONDITIONS	TEST-REMEDY
Knife fingers will not raise in FINGERS UP position.	MAIN SWITCH ____ Pull to Start SELECTOR _____ P & E CLAMP TABLE ____ Forward FINGERS _____ UP	(9A) Set voltmeter to the 50 volt dc scale. Connect the negative probe to ground or 14Z and the positive probe to 11Z. If a 24 volt dc reading is obtained, the FINGERS switch is good in the UP position. If not, replace switch.
Same as above	Same as above	(9B) Set voltmeter to the 150 volt ac scale. Connect the probes to 16Y and TP30. If a reading of 115 volts ac is obtained, the circuit board components are good. If not, replace circuit board.
Same as above	MAIN SWITCH ____ Push to Stop	[9C] Set the meter to the X10 ohms scale. Connect the probes to 14Y and TP30. If a reading of approximately 80 ohms is obtained, the fingers solenoid is good. If not, replace solenoid.
Knife Fingers will not rise in FINGERS SEMI position.	MAIN SWITCH ____ Pull to Start SELECTOR _____ P & E CLAMP TABLE ____ Forward FINGERS _____ SEMI Press Knee control	(9D) Set voltmeter to the 50 volt dc scale. Connect the negative probe to ground or 14Z and the positive probe to 8Y. If a reading of 24 volts dc is obtained, the FINGERS switch is good in the SEMI position, and the knife switch (Knee) contacts are good. If no reading is obtained, check each switch and replace the faulty one.
Same as above	Same as above, also: Close thread monitor switches	(9E) Set voltmeter to the 50 volt dc scale. Connect the negative probe to ground or 14Z and the positive probe to 11Z. If a 24 volt dc reading is obtained, the Thread Monitor switches are good. If not, replace faulty switch. Repeat steps (9A), (9B) and [9C]
Knife fingers will not rise automatically in FINGERS AUTO position.	MAIN SWITCH ____ Pull to Start SELECTOR _____ P & E FINGERS _____ AUTO	(9F) Set voltmeter to the 50 volt dc scale. Connect the negative probe to ground or 14Z and the positive probe to 17Z. If a reading of 24 volts dc is obtained, the FINGERS switch is good in the AUTO position.

SYMPTOM	MACHINE CONDITIONS	TEST-REMEDY
Same as above	Same as above, also: Close Fingers Up switch	(9G) Set voltmeter to the 50 volt dc scale. Connect the negative probe to ground or 14Z and the positive probe to 15Z. If a reading of 24 volts dc is obtained, the Fingers Up switch is good. If not, replace switch. NOTE: Table Forward switch must close while Fingers Up switch is actuated. See Switch Adjustments.
Same as above	Same as above	(9H) Set voltmeter to the 50 volt ac scale. Connect the negative probe to ground or 14Z and the positive probe to 8Y. If a reading of 24 volts dc is obtained, the Knee (Knife) Switch is good. If not, replace switch. Repeat steps (9A), (9B), [9C] and (9E)
Knife Fingers start to go up, but will not go up all the way.	MAIN SWITCH ____ Pull to Start SELECTOR _____ P & E FINGERS _____ SEMI Depress Knee switch momentarily.	(9I) Set voltmeter to the 50 volt dc scale. Connect the negative probe to ground or 14Z and the positive probe to TP10. If a reading of 24 volts dc is obtained, the Fingers Down switch is good. If not, replace switch.
Same as above	Same as above	(9J) Set voltmeter to the 150 volt ac scale. Connect the probes to 14Y and TP30. If a reading of 115 volts ac is obtained, the circuit board components are good. If not, replace circuit board.
Knife Fingers will not go down.	MAIN SWITCH ____ Pull to Start SELECTOR _____ P & E CLAMP TABLE ____ Forward Fingers raised by malfunction.	(9K) Set voltmeter to the 50 volt dc scale. Connect the negative probe to ground or 14Z and the positive probe to 11Z. If a reading of 24 volts dc is obtained, check the Fingers Down switch, the FINGERS (panel) switch in the UP position, the Fingers Up switch, and the Knee (Knife) Switch. Replace faulty switch.
Knife fingers vibrate in UP position.	Malfunction	(9L) Check for short in Knife Fingers circuit in area of Fingers Down switch.

10. UNLOADER CIRCUIT

GENERAL DESCRIPTION

The unloader circuit operates in conjunction with the Automatic Clamp up control circuit. When the clamp raises automatically, the auto clamp up relay (CR7)remains energized, holding the clamp up and supplying 24 volts dc to actuate the air jet nozzle of the unloading circuit. There are two identical circuits which operate simultaneously for a controlled length of time. One air jet nozzle is mounted on the machine top surface to the right of the clamp table and blows the completed material out to the left. The other air jet nozzle is mounted above material holder and blows the completed material down to a hanging position.

CIRCUIT DESCRIPTION

Each unloading circuit consists of a solenoid operated air jet nozzle, a triac, two relays and a time-constant controlled capacitor which supplies the voltage to energize the holding relay for the correct duration of time. The unloader operates whenever the clamp table is in the forward position and the clamp arms are raised automatically.

Twenty-four volts dc is available through the contacts of relay CR7 and the Auto Clamp Up switch to Unloader triac Q10, through the control components on the unloader circuit board.

The length of time the air solenoid is energized is varied through the potentiometer. Normal adjustment is to have as short a blast as possible on the right hand nozzle and a slightly longer blast on left hand nozzle.

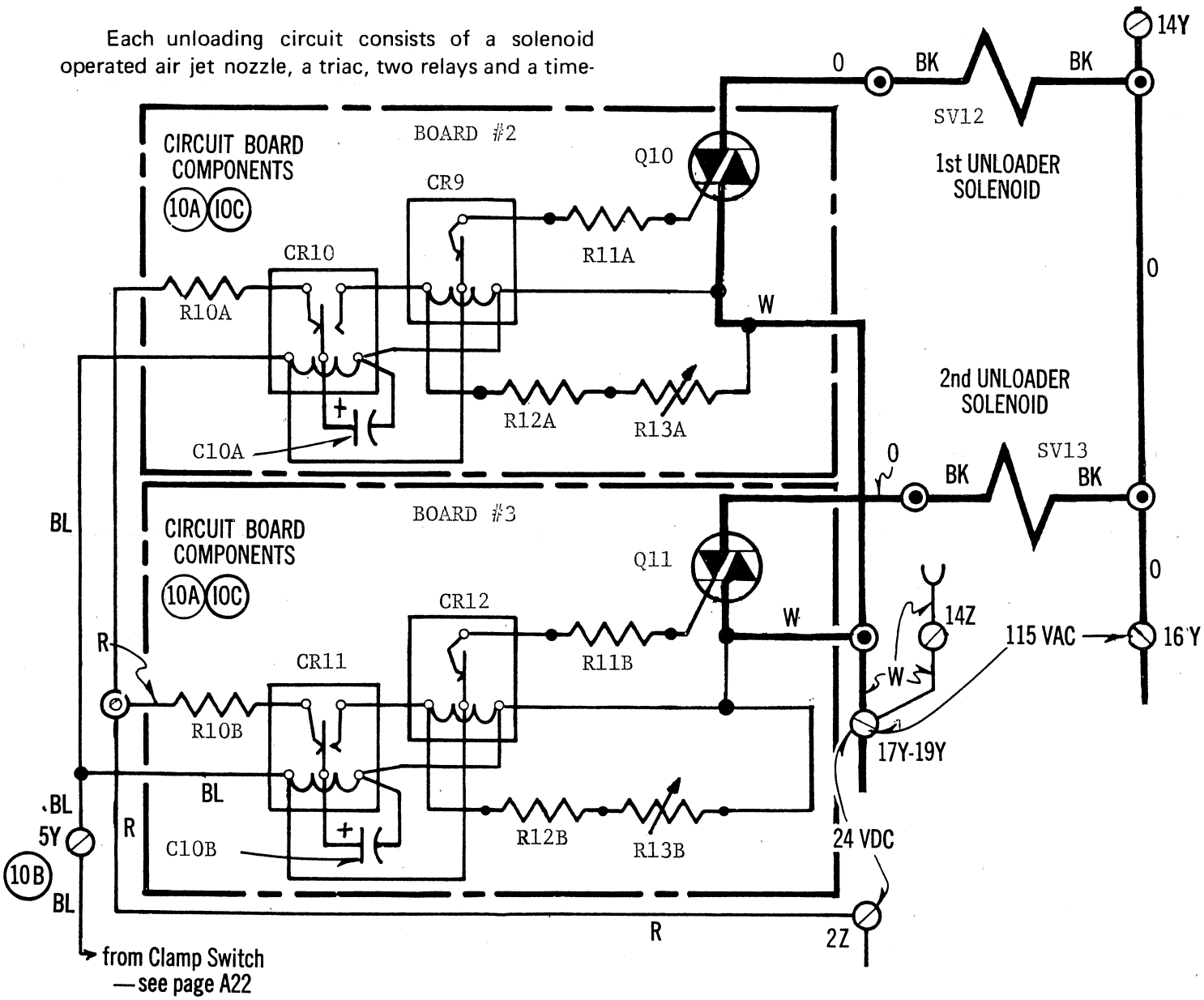

10. UNLOADER CIRCUIT TROUBLESHOOTING CHART

SYMPTOM	MACHINE CONDITIONS	TEST-REMEDY
No air blast for material removal	MAIN SWITCH _____ Pull to Start SELECTOR _____ P & E CLAMP TABLE _____ Back CLAMP _____ Up	(10A) Set voltmeter to the 50 volt dc scale. Connect the negative probe to ground or 14Z and the positive probe to 2Z. If a 24 volt dc reading is obtained, power supply is good and voltage is available to the unloader circuit charging capacitor.
Same as above	Send knifefingers up and down. This will operate clamp up.	(10B) Set voltmeter to the 50 volt dc scale. Connect the negative probe to ground or 14Z and the positive probe to 5Y. If a 24 volt dc reading is not obtained, see Clamp Circuit (1).
Same as above	Same as above	(10C) Set voltmeter to the 150 volt ac scale. Disconnect the orange (O) wire from the unloader circuit board to the solenoid valves. Connect the leads between 16Y and the orange (O) wire from the board and check for 115 volts ac when the clamp goes up. If voltage is present and no air blast, replace solenoid valve. If no voltage is present, replace unloader circuit board. If air does not turn off, replace unloader circuit board.

11. CENTER KNIFE UP/DOWN

GENERAL DESCRIPTION

When the center knife 3-position switch (S33) is in the 'normal' position, the center knife will operate normally during the center dense portion of the sew cycle. The center knife can also be held in the 'up' or 'down' position by selecting these settings manually with the switch.

CIRCUIT DESCRIPTION

During 'normal' operation, the center knife is activated up into the cutting area when +24V dc is supplied to solenoid SV11. The 24 volts for this function is provided through the clutch dog switch (S16) and the knife up switch (S32). The center knife will be deactivated back down out of the cutting area when +24V dc is supplied to solenoid SV10 through switch S12 at the beginning of dense finish sewing. In this position, the center knife switch is essentially not in the circuit.

Shifting Center Knife Up - Into Cutting Area:

The 24 volts is supplied directly through the center knife switch to the knife up solenoid (SV11) when the 'up' function is selected.

Shifting Center Knife Down - Out Of Cutting Area:

The 24 volts is supplied directly through the center knife switch to the knife down solenoid (SV10) when the 'down' function is selected.

NOTE: Set air regulator at 50 PSI; also there are two potentiometers on the solenoid valve; if adjustment is made to either one, keep the centerknife action set so that it will come up and down softly. If set to come down hard, it may cause the end dense to disappear.

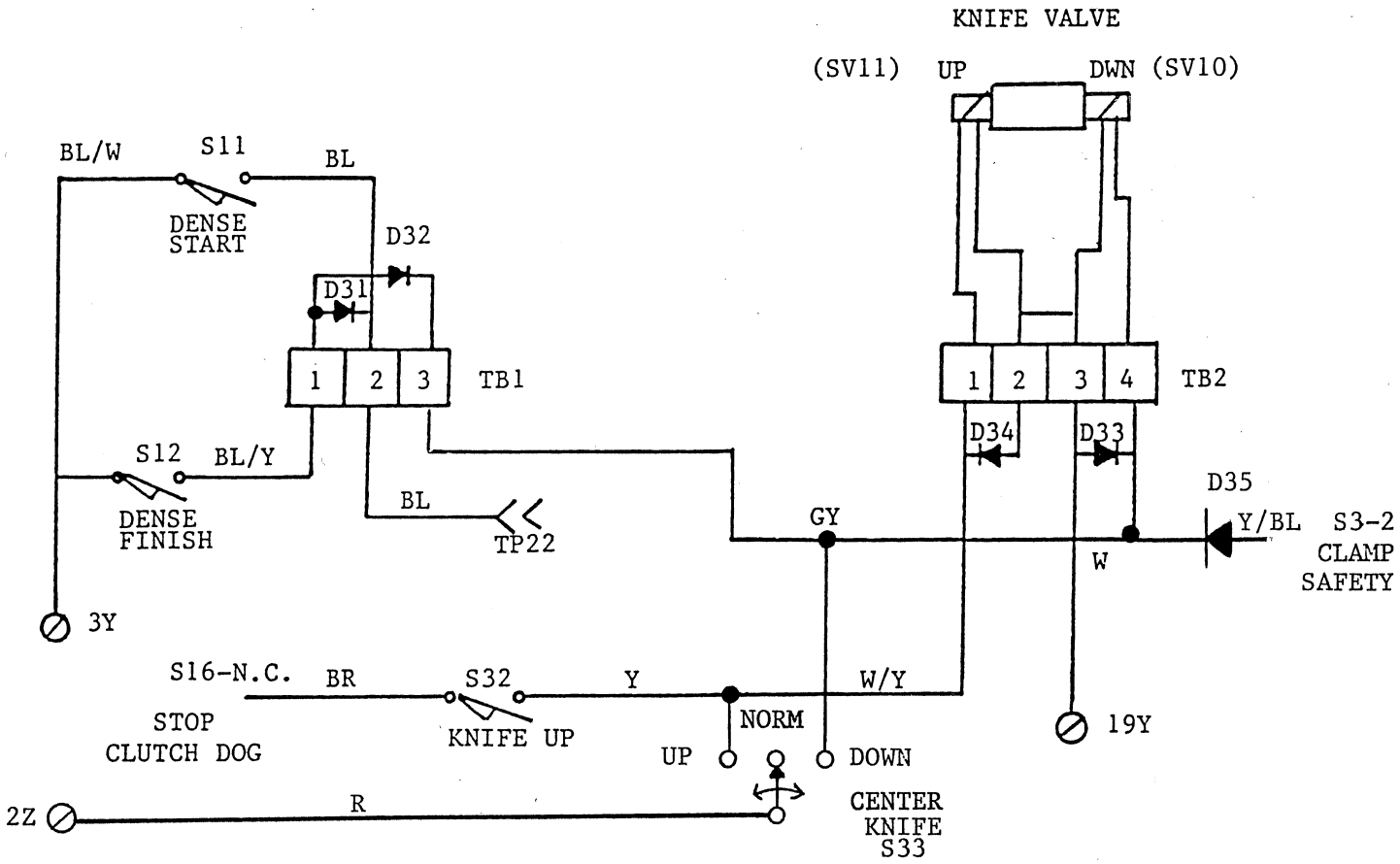

NOTES

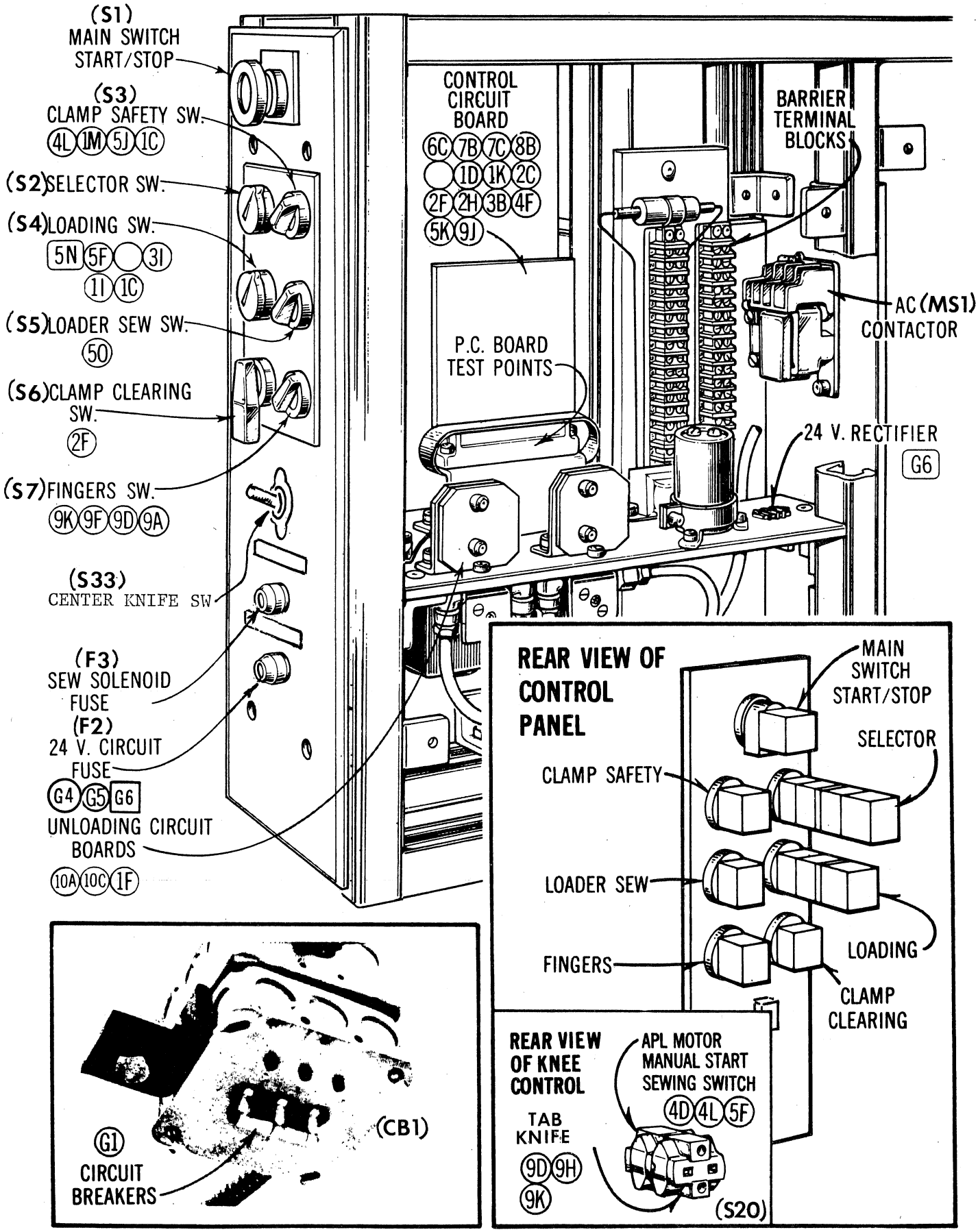
(S1)
MAIN SWITCH
START/STOP
(S3)
CLAMP SAFETY SW.
4L 1M 5J 1C
(S2) SELECTOR SW.
(S4) LOADING SW.
5N 5F 3I
1I 1C
(S5) LOADER SEW SW.
5O
(S6) CLAMP CLEARING SW.
2F
(S7) FINGERS SW.
9K 9F 9D 9A
(S33)
CENTER KNIFE SW
(F3)
SEW SOLENOID FUSE
(F2)
24 V. CIRCUIT FUSE
G4 G5 G6
UNLOADING CIRCUIT BOARDS
10A 10C 1F
CONTROL CIRCUIT BOARD
6C 7B 7C 8B
1D 1K 2C
2F 2H 3B 4F
5K 9J
P.C. BOARD TEST POINTS
BARRIER TERMINAL BLOCKS
AC (MS1) CONTACTOR
24 V. RECTIFIER
G6
REAR VIEW OF CONTROL PANEL
MAIN SWITCH START/STOP
SELECTOR
CLAMP SAFETY
LOADER SEW
LOADING
FINGERS
CLAMP CLEARING
REAR VIEW OF KNEE CONTROL
APL MOTOR MANUAL START SEWING SWITCH
4D 4L 5F
TAB KNIFE
9D 9H
9K
(S20)
G1
CIRCUIT BREAKERS
(CB1)

A58 ELECTRICAL COMPONENTS - SETTINGS AND ADJUSTMENTS

Before adjusting switches, pull Main (Stop/Start) Switch out and send Clamp Table to its back position by turning Clamp Clearing Switch to Back. Set Selector Switch to "Elec.". Energize Sewing cycle by pressing Knee Control. This will eliminate clamp table feed pressure and permit the Clamp Table to be moved forward manually. It will also enable switches to actuate their corresponding solenoids to simplify checking switch adjustments.

(S19) FINGERS UP SW. (9L)(9G)(9K)

Forward movement of actuator (A) must click this switch after or while bracket (B) has actuated Clamp Table Forward Switch.

(S13) CLAMP TABLE FORWARD SWITCH (1H)(3A)(3H)(5H)(6A)

Forward movement of roller bracket (B) must click switch before the Fingers Up switch is actuated. Bend switch lever as required.

IMPORTANT: Fingers will not operate automatically unless this adjustment is correct.

(S11) DENSE START SW (6F)(6B)

(S24) APL MOTOR AUTO START SW. (5E)(4D)

Set switch arm high on bracket so that switch clicks when contacted by forward movement of roller bracket (C). Both switches must be set to click at same time.

See Insert

A

B

C

D

E

(2G)(2I)

(S15) LENGTH SAFETY SWITCH

Position switch to click when contacted by forward movement of actuator (D). A minimum of 3/8" must be maintained between the center line of the Length Switch roll and the Length Safety Switch roll.

(S32) CENTER KNIFE UP SW

CENTER KNIFE DOWN DENSE FINISH - LENGTH SWITCHES

See facing page **(S12), (S9)**

(1L)

(S23) AUTOMATIC CLAMP UP SWITCH

(S17) FINGERS DOWN SAFETY SWITCH

(4A)(3D)(2A)(1A)(5B)

Set switches to click just before lever (E) reaches bottom of its stroke.

IMPORTANT: Switches click twice -- once when the lever is depressed and again when the lever is released. The click points can be heard at close range or may be felt by placing a finger lightly on the fulcrum point of the switch lever.

NOTE: All adjustments refer to the first click of the switch.

(1K)(9L)(1G)(9I)(9K)(1J)

(S21) FINGERS DOWN SWITCH

Set this switch to click just before (F) reach top of slots in cam plate

F

AUTOMATIC **(S23)** CLAMP UP SWITCH

(S17) FINGERS DOWN SAFETY SWITCH

DENSE FINISH & LENGTH SWITCH

"OFF THE MACHINE" ADJUSTMENTS – Holding a scale against front of switch unit, check the click points of both switches as follows:

When switch unit lever is depressed 1/16" the Dense Finish switch must click. When lever is further depressed an additional 3/32", the Length switch must click. This unit is pre-set for this timing, but if realignment is necessary, do so by means of the adjusting screws.

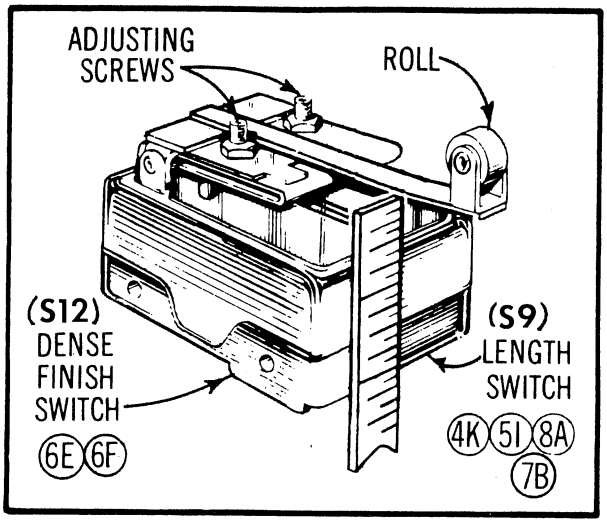

"ON THE MACHINE" ADJUSTMENTS – Install the switch unit on machine to the following settings:

It must be high enough on its bracket so that the forward movement of actuator clicks both switches, and the roll remains in contact with the actuator as long as possible. See Thread Pickup switch adjustment.

Do not set too high or the clamp circuit will be broken when the clamp table travels back to "start sewing" position, causing the clamp to fall momentarily. When adjustment is correct, there will be five or six dense stitches before stopping at the end of the sewing cycle.

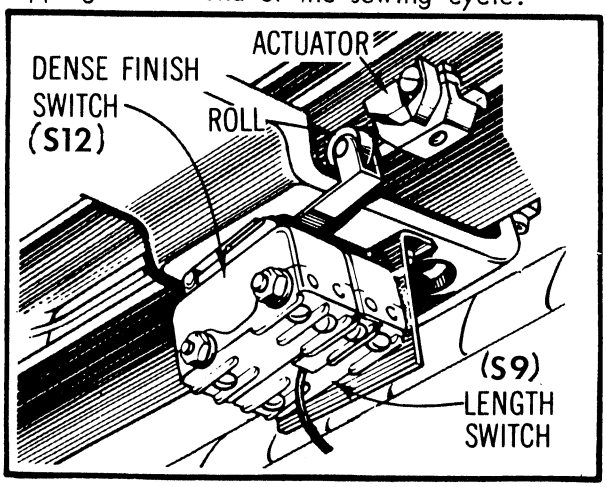

CLUTCH DOG SWITCH

Set switch to click within 1/8" movement of clutch dog. This adjustment can only be made when clamp table is in the rear position, stop motion is locked, and the clutch solenoid is raised manually.

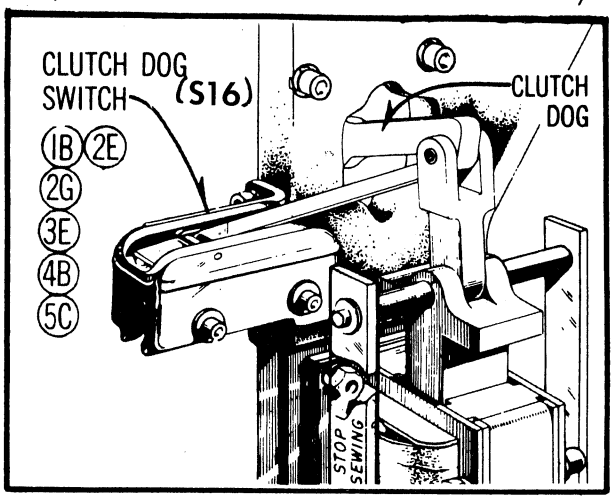

THREAD PICK-UP SENSOR

The overthrow of the stop motion is sufficient to momentarily actuate this sensor. The sensor will trigger the timing I.C. on the thread pick-up board when the actuator first passes in front of the sensor and then returns to its home position. To test the sensor, place a screwdriver in front of the sensor. The thread pick-up function will not operate until you remove the screwdriver from in front of the sensor. This removal of the steel actuator will cause thread pick-up to function. Adjust the gap between the face of the sensor and the side of the actuator to .030" (.050" max.). Make sure that the bottom of the sensor is level with the top of the actuator.

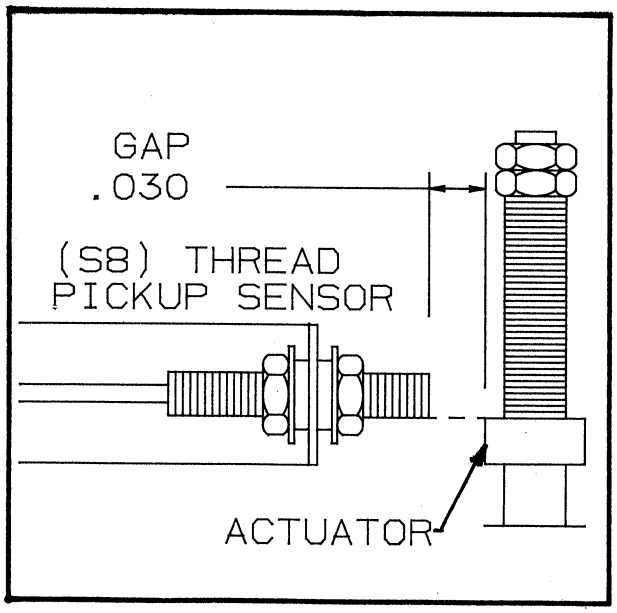

TIMING SWITCH

The clutch dog (bumper) must be 'triggered' at the correct moment to engage the clutch release dog without 'fly-over'. See Page A96, Clutch Dog (Bumper) Adjustment. Accurate adjustment of both timing sensor and cam is essential to stop the sewing at the correct time. Adjust proximity sensor height for proper clearance between the face of the sensor and the large diameter of the cam. The sensor should be centrally located with the width of the cam, not touching the cam at any point during cam rotation, and be no further away from the cam than .030" maximum.

Before starting adjustment of cam, set the control panel in the following position:

Main	Pull to Start
Selector	P & E
Clamp Safety	Normal
Loading	Man. Front to Back
Loader	Any Position
Clamp Clearing	Center *
Fingers	Any Position

Press pedal to send clamp table to its back position (* or by clamp clearing switch). Now, move selector switch from P & E position to elec. position and press knee control to release drive shaft. Turn the clamp safety switch to the repair position. Rotate the drive shaft until the leading edge of the clutch sheave is lined up with the top of the "dog". With the drive shaft in this position, rotate the timing cam until the alignment groove is located directly under the proximity sensor. Lock the cam in place with the front set screw. Rotate the drive shaft and lock down the second set screw of the timing cam.

To Test Timing Cam Setting: Return the clamp safety switch to the normal position. Actuate the knee switch. Rotate the drive shaft 90 degrees. Hold the length switch closed and rotate the drive shaft until the stop solenoid is energized. Verify that the "clutch release dog" has travelled past the top of the "dog".

NOTE: The cable coming out of the proximity sensor should not have a sharp bend or be pulled tight. A smooth arc is required for proper operation of the proximity sensor assembly.

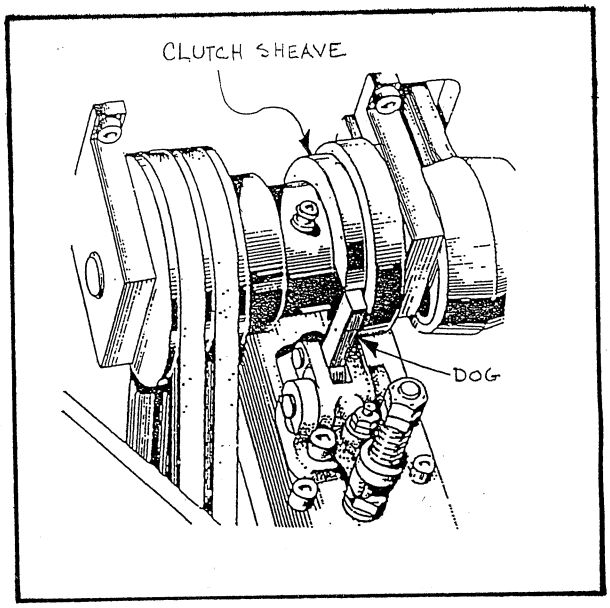

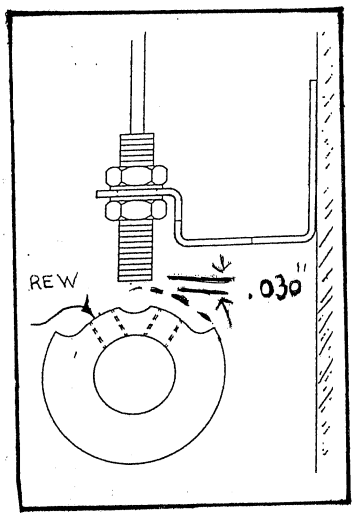

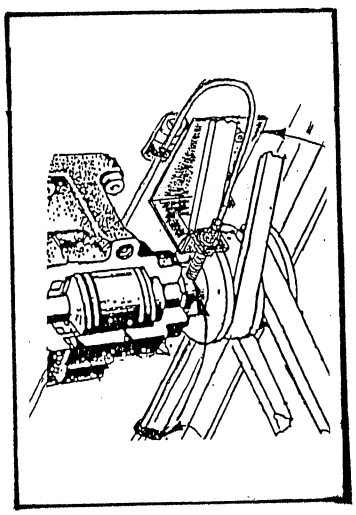

KNEE CONTROL

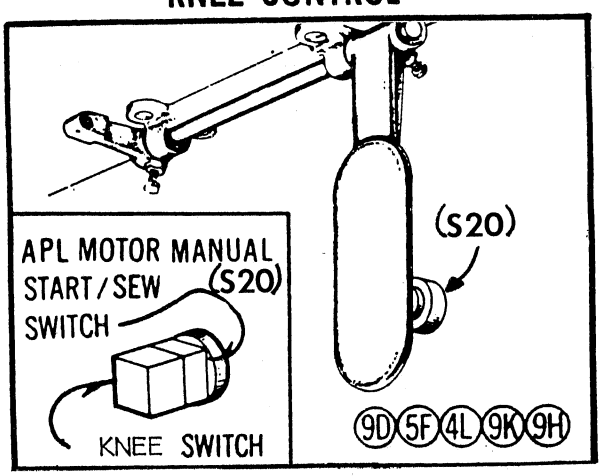

PEDAL SWITCHES

STANDING

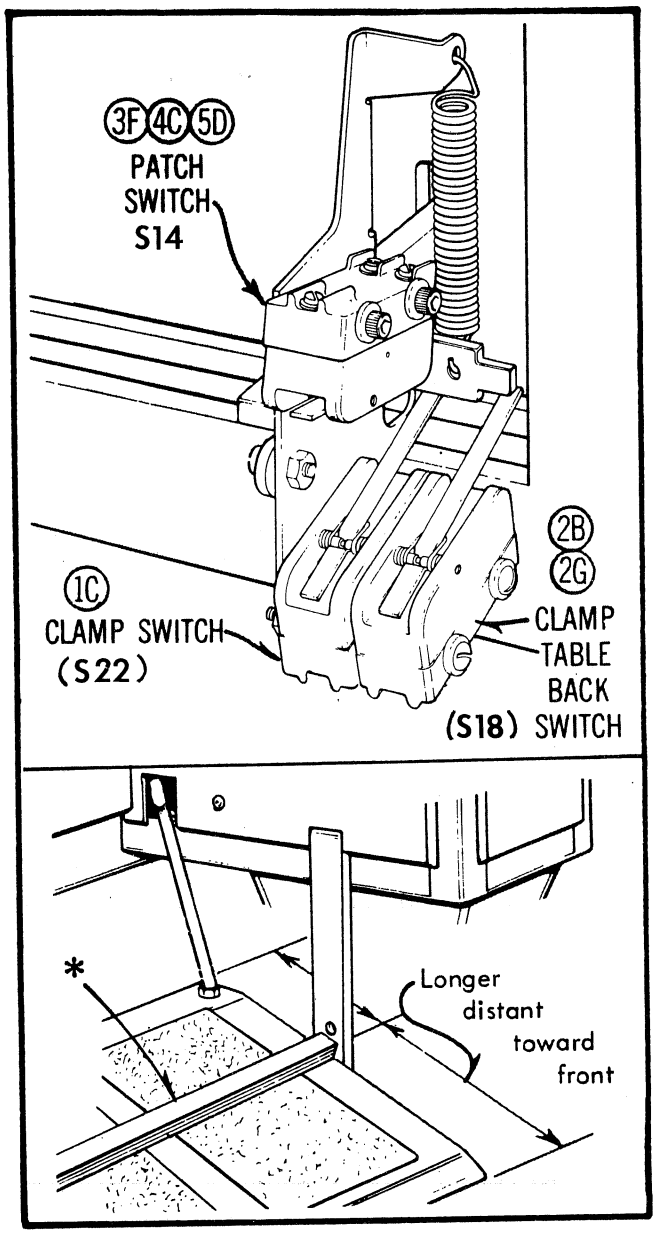

SITTING

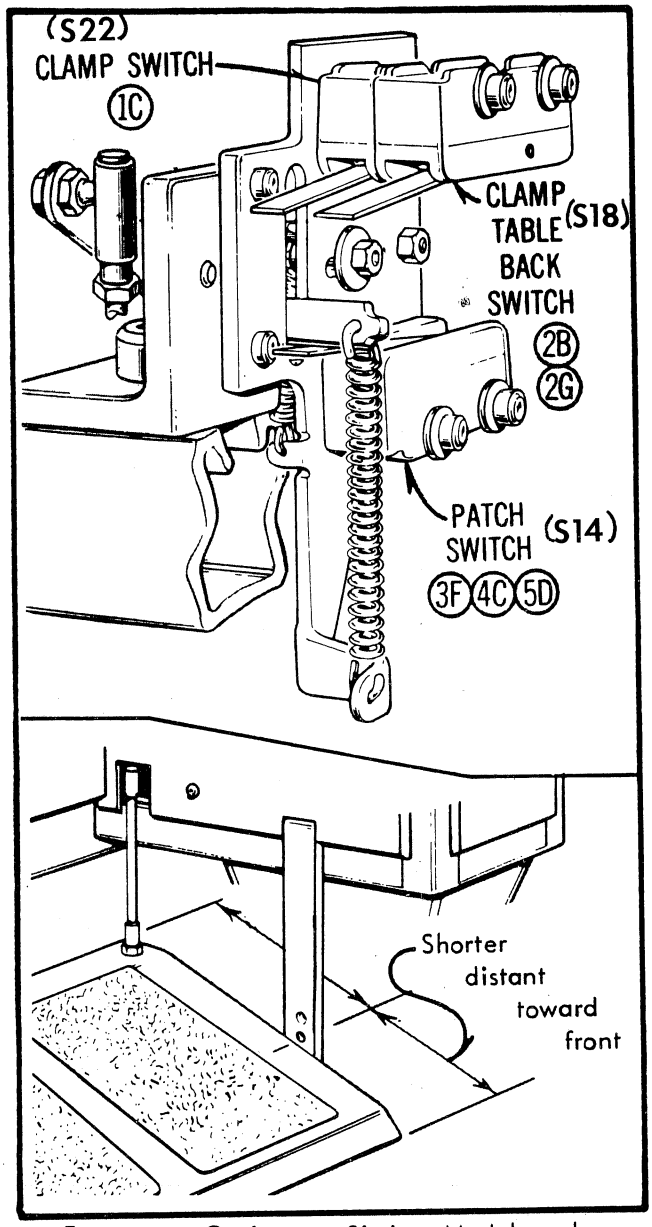

*Footrest - Option on Sitting Models only

THREAD MONITORING SWITCHES

These switches are wired in series across the knife Fingers circuit. If thread breaks, the opening of either of these switches will keep the knife fingers from raising, thus allowing the operator to make repairs.

TO ADJUST: Set switches on bracket to assure activation when threads are taut at the end of the sewing cycle.

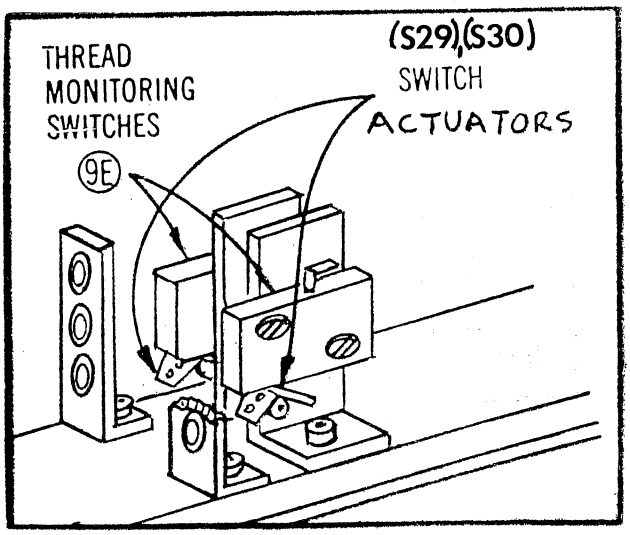

AUTOMATIC SEW SWITCH

As the patch loader is returning to its rest position, after loading patches, screw (H) actuates Automatic Sew switch, which starts the sewing cycle. Settings must be so that switch clicks when patch loader arm is traveling in the direction of arrow, and patch tray is clear of patch folding mechanism.

TO ADJUST: Set patch loader arm to meet above conditions by loosening collar. Rotate and set collar to actuate Automatic Sew switch when patch loader arm is at above described position.

CAUTION: The Automatic Sew switch is set in a fixed position and is not adjustable.

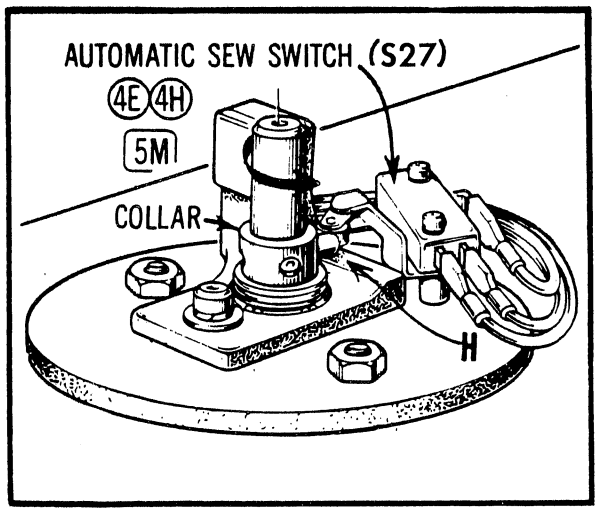

LOADER MOTOR SWITCH

When the patch loader arm returns to its rest position, screw (J) actuates the loader motor switch, which in turn stops the loader motor. In combination with the braking mechanism and this switch, the patch loader arm must come to a complete stop as soon as this switch is actuated.

TO ADJUST: With patch loader arm in rest position, adjust screw (J) to click Loader Motor switch. After switch clicks, check that there is 1/16" additional travel of patch loader arm. This is to assure that the switch remains actuated in order to prevent the premature starting of the loader motor.

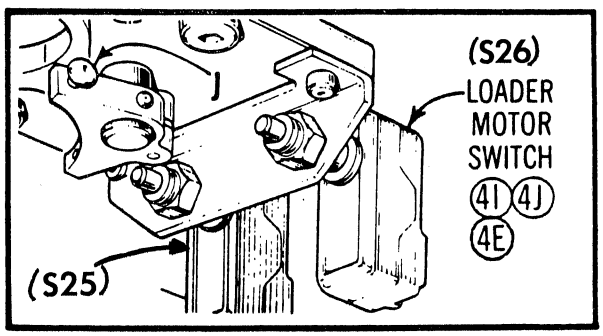

PATCH LOADER SWITCH

When patch loader arm reaches loading position, screw (K) will actuate Patch Loader switch, causing the patch folding brushes to close. This switch has a strong internal spring which is very effective in preventing deflection when the patch loader arm contacts stop.

TO ADJUST: Position screw (K) so that it causes the Patch Loader switch to click when the patch tray is in loading position. **IMPORTANT:** Check that switch plunger has 1/64" additional travel after patch loader arm has reached its loading position. This added movement is necessary to prevent jamming plunger into body of switch. If necessary, loosen nut (L) and reposition the switch on bracket to obtain 1/64" movement.

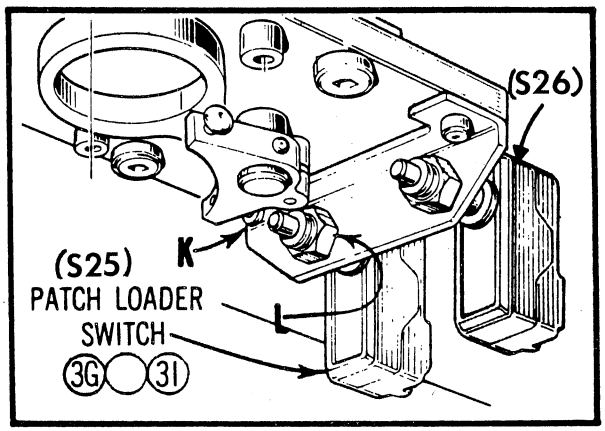

PATCH FOLDING SAFETY SWITCH

This switch is connected in series with the Sew/Center Dense Circuit. It is actuated by the closing of the Folding Brushes when the Clamp Table is in or approaching its rear position. Its function is to prevent sewing from starting until the Brush Blades are between the needle slots and sides of the Patch Guide.

TO ADJUST: The following procedure is for obtaining the proper timing of switch actuation in relation to the position of the Brush Blades.

1. Operate Clamp Table to its back position allowing Clamp Arms to drop and Folding Brushes to remain open, while keeping Pedal depressed.
2. Stop flow of oil to Patch Folding Cylinder by turning Patch Folding metering screw (see page 61) until Brushes remain open when the Pedal is released.
3. Turn Patch Folding metering screw out, which will cause Folding Brushes to slowly close. Listen for actuation (click) of switch.

4. Click of switch must occur when Brush Blades are approximately 1/32 of an inch from the sides of the Patch Guide. This adjustment may vary slightly depending on the thickness of the material being used.

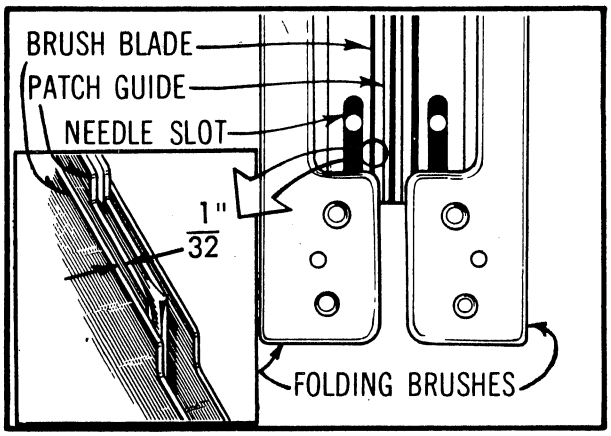

When making these adjustments or replacing a switch, the Pump and Motor must be turned OFF.

Proceed as follows:-

1. Send Clamp Table to its forward position.
2. Set Selector Switch to ELEC. position.
3. Turn Clamp Clearing Switch to BACK position. Clamp Table will not move because of position of Selector Switch but the Clamp Table Travel Solenoid will be energized permitting manual movement of the Clamp Table.
4. Manually close Folding Brushes.
5. Holding Folding Brushes close, manually move Clamp Table to rear position.
6. Switch should actuate (click) when Clamp Table is 1/16 of an inch from its extreme rear position.

   TO ADJUST: Set switch position on Bracket by means of screws (M). Obtain back and forth setting of actuator by means of screw (N).

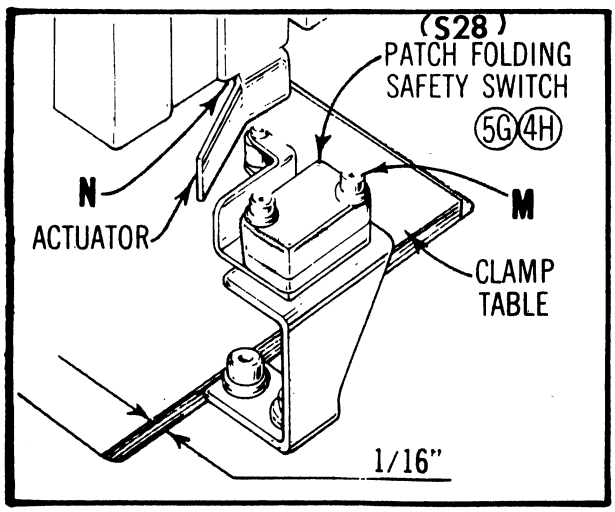

PATCH LOADER MOTOR BRAKING

When making the following adjustments, set the Control Panel switches as follows:

Main	Pull to Start
Selector	P & E
Clamp Safety	Repair
Loading	Man. Front
Loader Sew.	Off
Clamp Clearing	Center
Fingers	Any Position

Braking is used to instantly stop the rotor as soon as the motor has been de-energized. This prevents overthrow of the Patch Loader Arm when reaching its rest position.

With Clamp Table all the way back, momentarily press Knee Switch. Release as soon as the Patch Loader Arm has travelled a short distance. If there is any overthrow or "gliding" of the Patch Loader Arm after the Knee Switch is released, adjust Patch Loader Motor Braking.

TO ADJUST:

1. Remove oil cups and motor cover.
2. Press and release the Knee Switch while observing action of rotor at point (P).
3. If there is overthrow, turn the adjusting screw (Q) clockwise for more braking action. The downward movement of the rotor should be approximately 1/64 of an inch when the Patch Loader Motor is energized.

CAUTION: Excessive braking will cause the Patch Loader Motor to overheat and binding may occur.

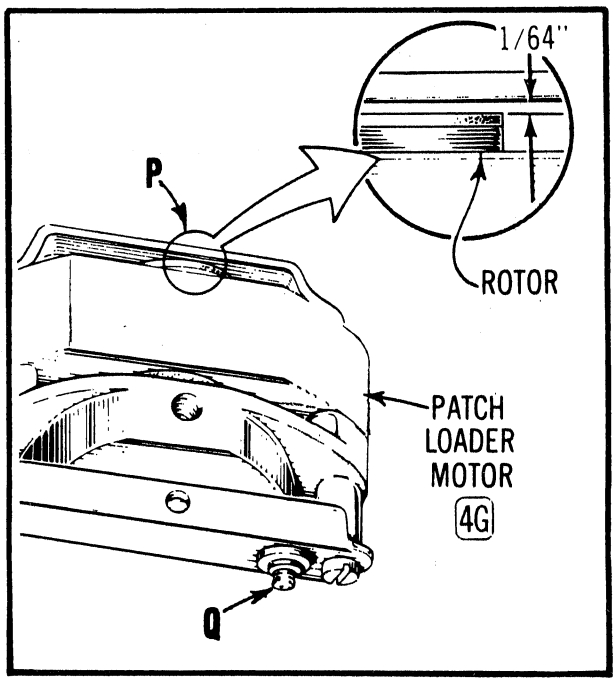

INTERLOCK SWITCH

This switch is wired in series with Thread Pick-up Circuit. Its purpose is to prevent the actuation of the Thread Pick-up Solenoid if the machine head cover is not completely closed.

TO ADJUST: Switch should be set on its bracket to "click" open as soon as machine head cover is raised.

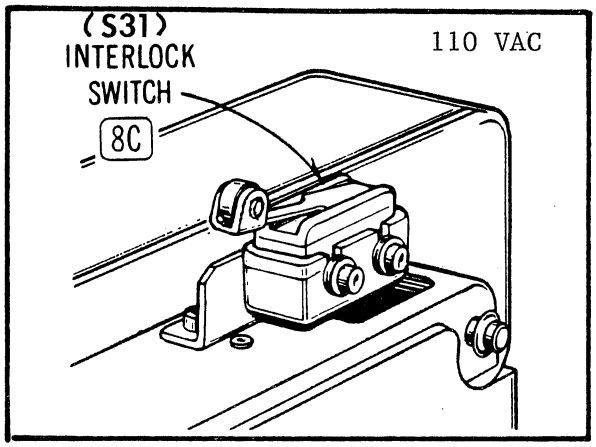

THREAD PICK-UP SOLENOID

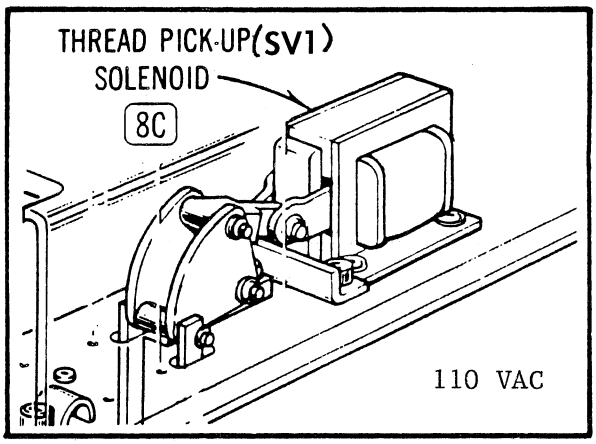

UNLOADING SOLENOIDS

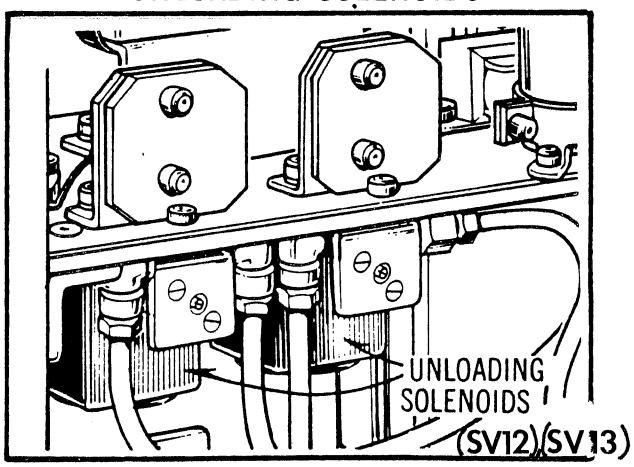

STOP/START SOLENOID

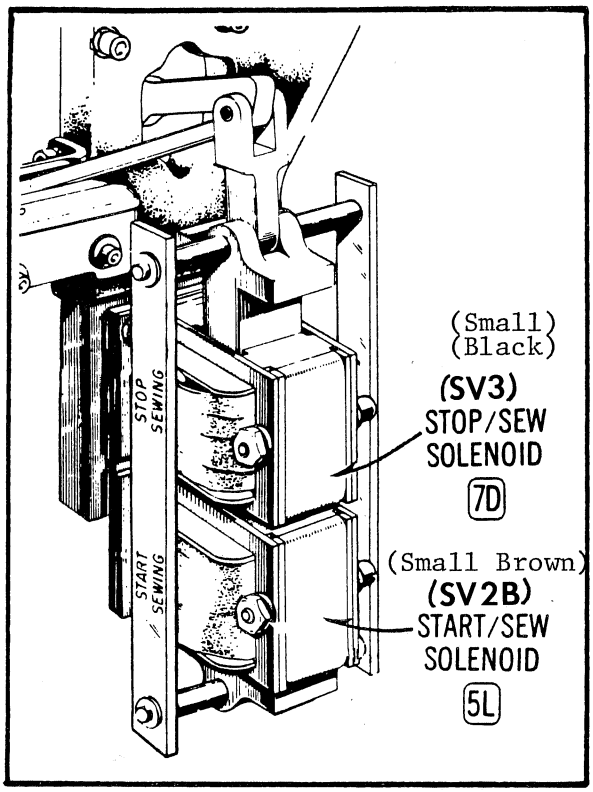

MANIFOLD SOLENOIDS

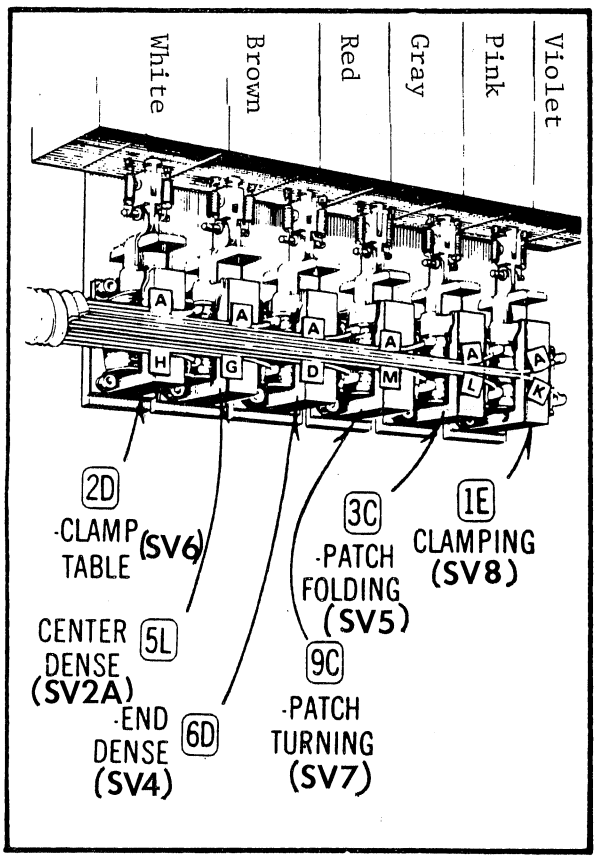

BARRIER TERMINAL BLOCKS
WIRE CONNECTIONS AND TEST POINTS

TBY					TBZ		
CLUTCH DOG (S16)	1 Y (2)	CLAMP CLR (S6-1)		+24 VOLTS	1 R (2)	+24 VOLTS
TABLE FWD (S13)	2 BK (2)	FINGERS (S7-8)		+24 VOLTS	2 R (3)	+24 VOLTS
TABLE FWD (S13)	3 BL/W,O (3)	LOADING (S4-1)		1st MTR START (S24)	3 BK/R	
FINGERS DWN (S17)	4 W/G (2)	3rd POS. FT.SW.		CLAMP SAFETY (S3-4)	4 Y/R (2)	P1-5
2nd POS CLAMP (S22)	5 BL (3)	FINGERS DWN (S23)	C200	PATCH LDR (S25)	5 W/BK (3)	P1-7
	6 BK/O (1)	P1-12		CLAMP CLEARING (S6-2)	6 Y/BL (2)	P1-8
LOADING (S4-5)	7 BK/W (2)	1st MTR STRAT (S24)		LOADING SW. (S4-3)	7 W/BR (2)	P1-9
KNEE SW (S20-2)	8 W/BL (2)	THREAD MONITOR		1st POS. PATCH (S14)	8 Y/BR (2)	P1-11
TIMING SW (S10)	9 BR/Y (2)	CLAMP SAFETY		3rd POS. FOOT SW. (S18)	9 G (2)	P1-13
P1-29	10 R/Y (1)	PATCH LDR MTR (M2)		1st POS. PATCH (S14)	10 BR/W (1)	P1-15
P1-34	11 BR (2)	FUSE (SEW)		FINGERS (S7-7)	11 P (2)	P1-17
FUSE (SEW)	12 BR (2)	SV2B (SEW)		CLAMP SAFETY (S3-7)	12 V (2)	P1-20
	13 OPEN			KNEE SW. S20-4)	13 Y/BK (1)	P1-24
PATCH LDR MTR (M2)	14 O (2)	120 VAC	C101		14 W (2)	GROUND
	15 O (1)	120 VAC		FINGERS UP (S19)	15 Y/G (2)	KNEE SW. (S20-1)
120 VAC	16 O (1)	120 VAC FUSE (F2)		LOADER/SEW (S5-4)	16 W/R (1)	PATCH FOLD: SAFETY (S2
24 VAC TXFMR	17 W (3)	GND		FINGERS (S7-2)	17 R/W (3)	FINGERS UP (S19)
R100	18 W (2)	GND	R100		18 BK/Y (2)	STOP/START (S1-4)
	19 W (2)	GND			19 G (2)	2.5 VAC
120 VAC	20 BK (2)	24 VAC			20 G (2)	2.5 VAC PC LA

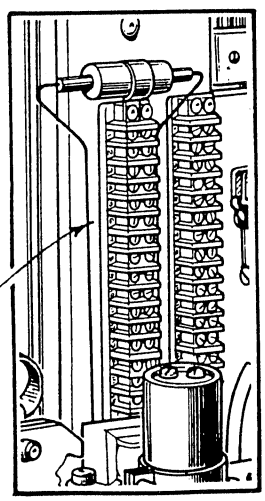

A66 CONTROL CIRCUIT BOARD WIRE CONNECTIONS AND TEST POINTS

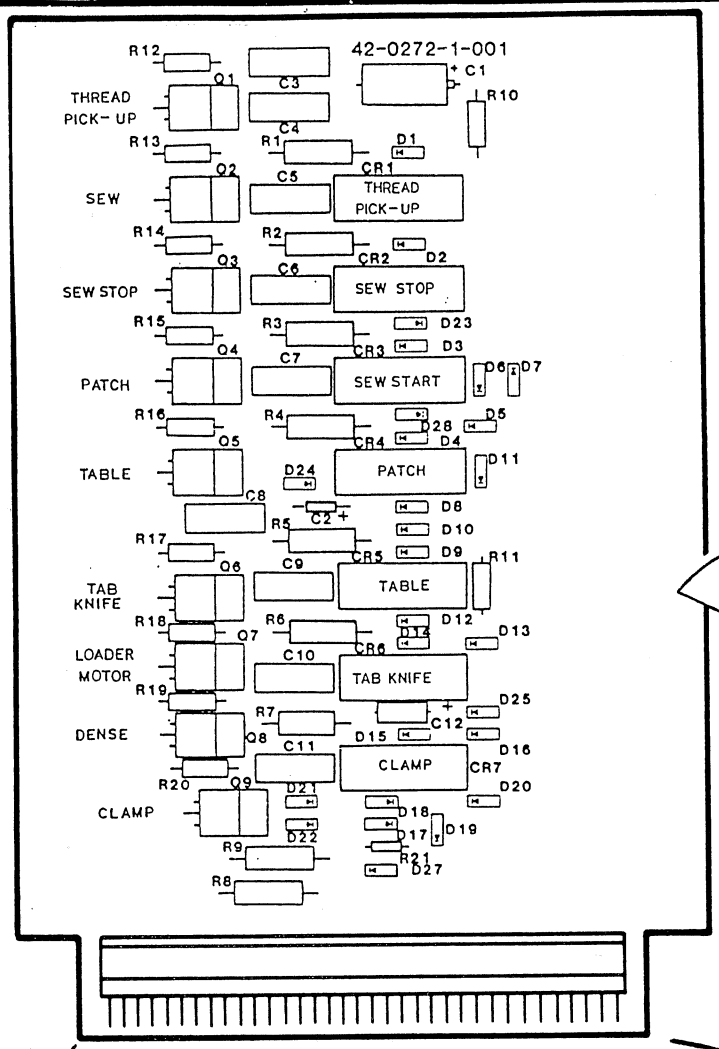

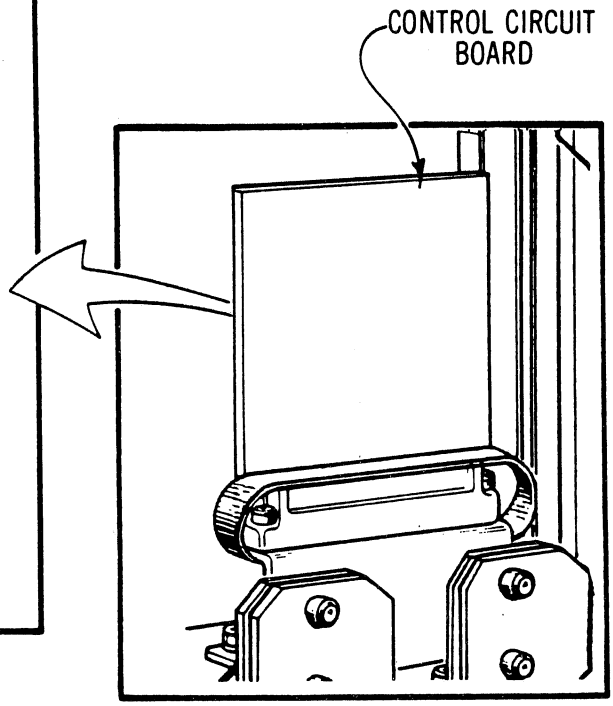

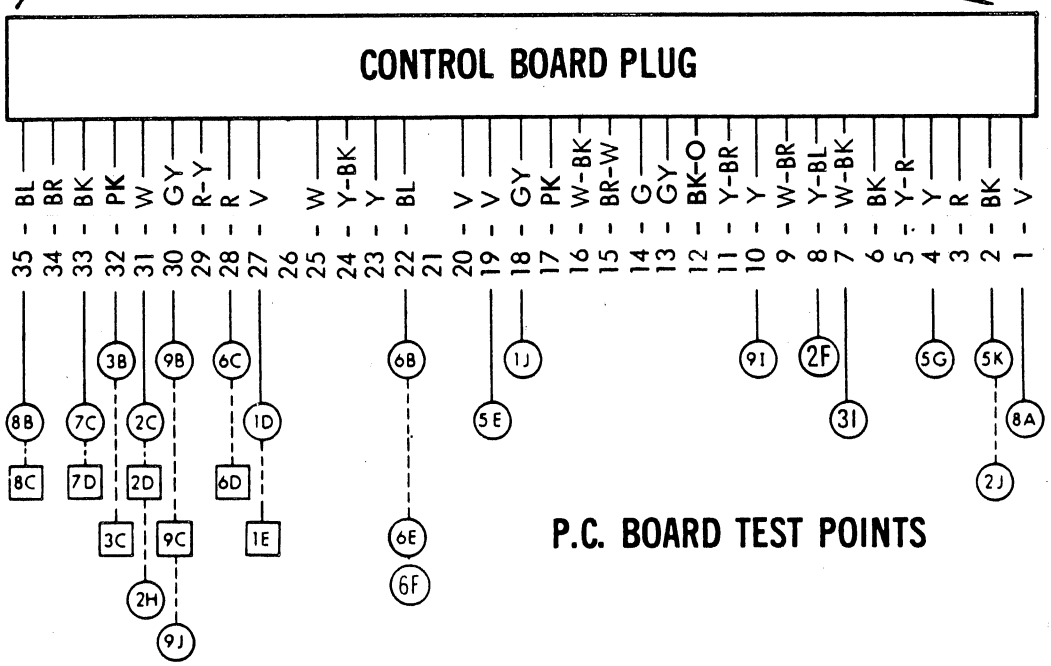

P.C. BOARD TEST POINTS

UNLOADER CIRCUIT BOARDS (2USED)

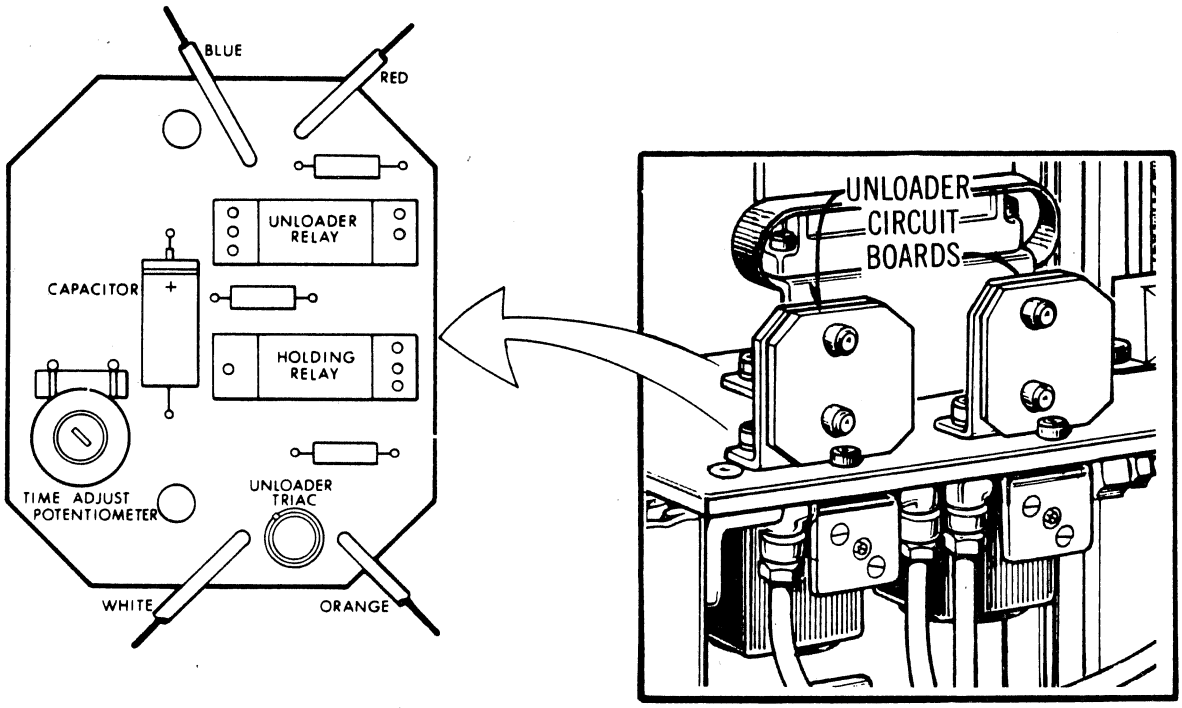

A68 SINGLE PHASE POWER SUPPLY WIRING DIAGRAM

100-400 VOLTS 50-60 CYCLE (HERTZ)

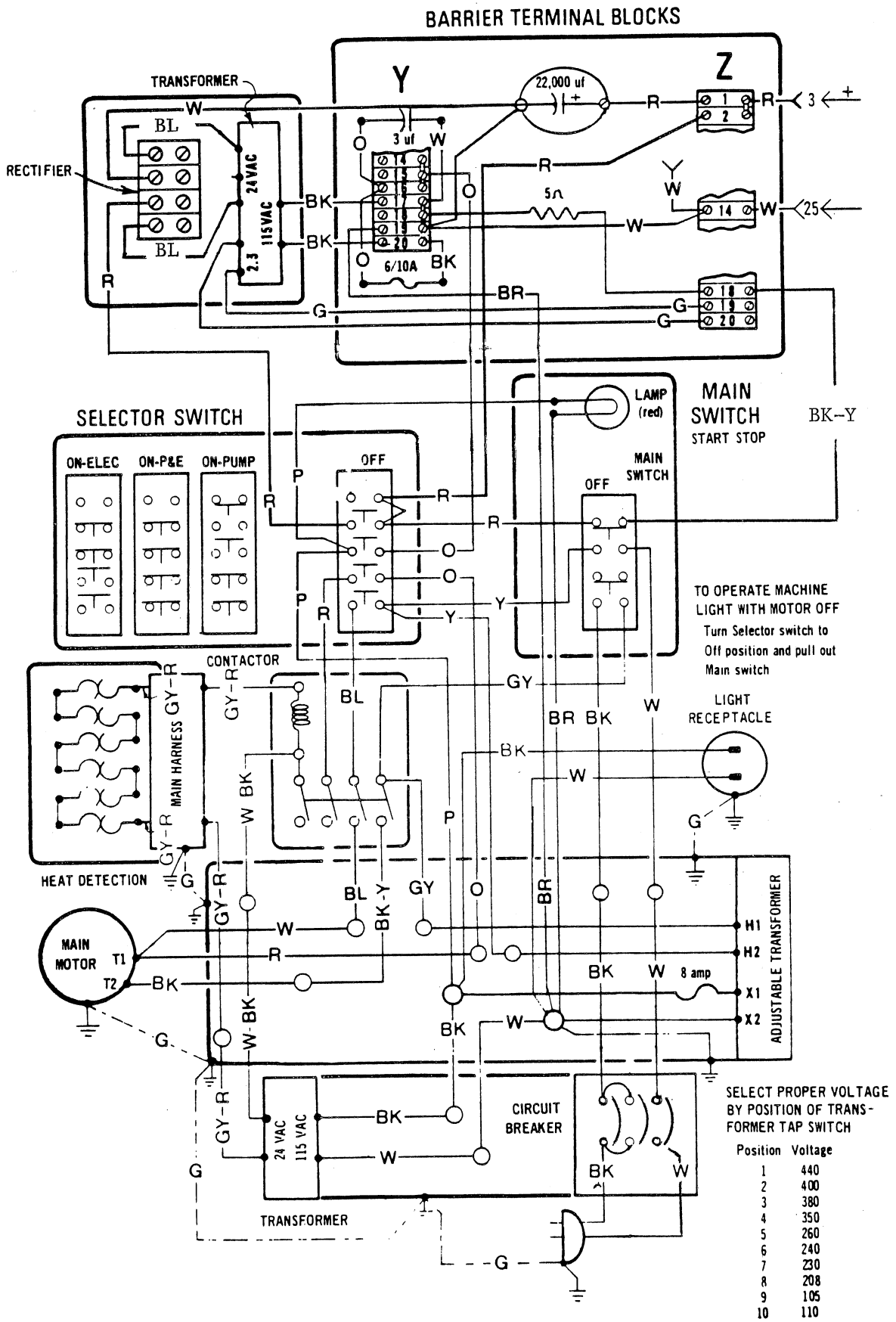

SELECT PROPER VOLTAGE BY POSITION OF TRANSFORMER TAP SWITCH

Position	Voltage
1	440
2	400
3	380
4	350
5	260
6	240
7	230
8	208
9	105
10	110

MULTIPLE PHASE POWER SUPPLY WIRING DIAGRAM A69

100-400 VOLTS 50-60 CYCLE (HERTZ)

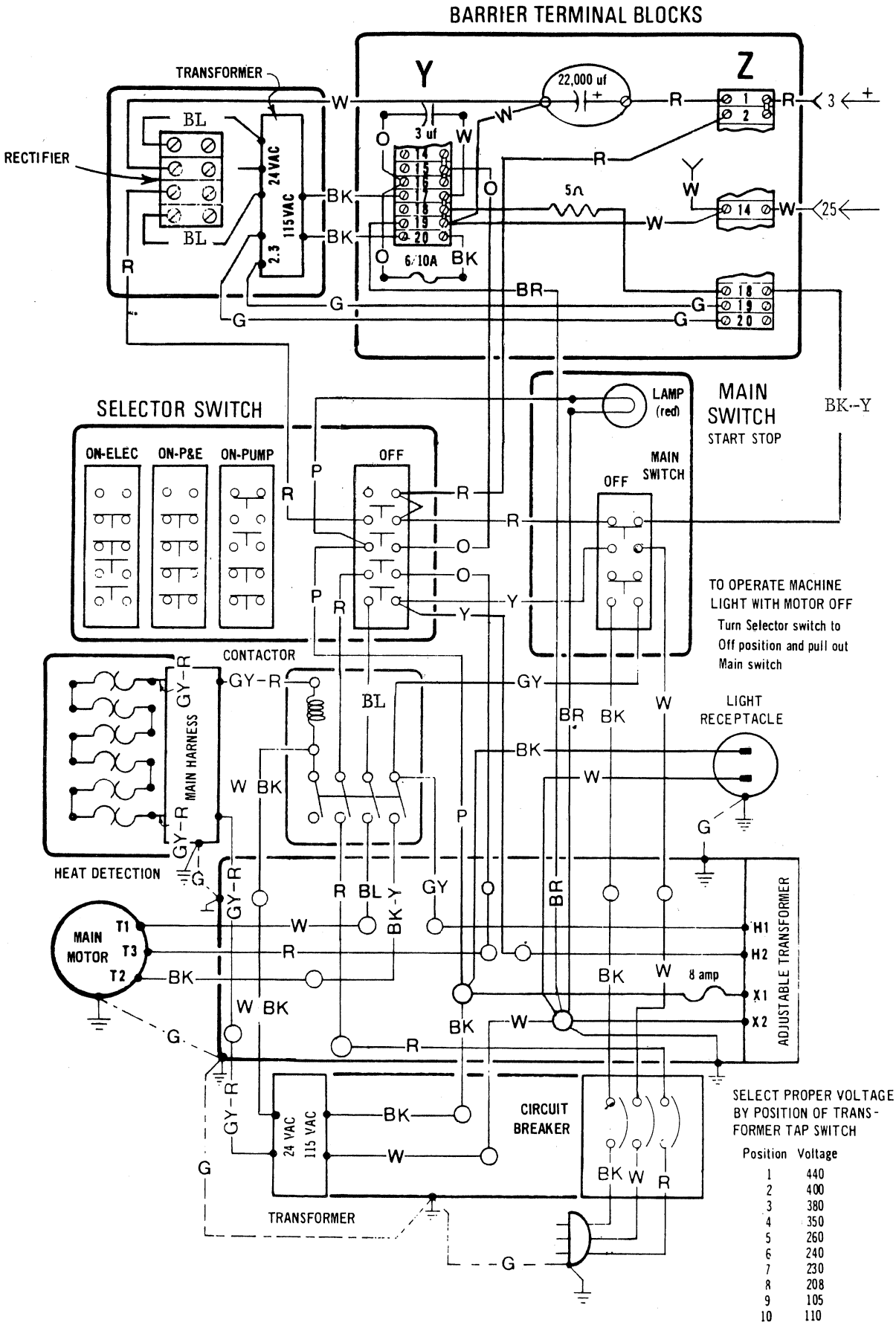

A70 NOTES